CANTILEVER ARM

ASS-M

Description

The ASS-M was specifically designed for entry into tanks and silos, where it connects to existing perforated flanges. It can be connected. It is bolted to the perforated flange of the container or silo, allowing a person to safely descend. The ASS-M boom arm is used where frequent work intervals are required and tasks need to be completed quickly.

Specifications

- Ausführung des Dreibeins: Edelstahl V4A
- Zertifiziert nach: EN 795:2012 Typ B, CEN TS 16145:2013
- Eigengewicht: 42 kg
- Max. Verwendungsdauer: 10 Jahre
- Nennlast: Max: 1 Pers.



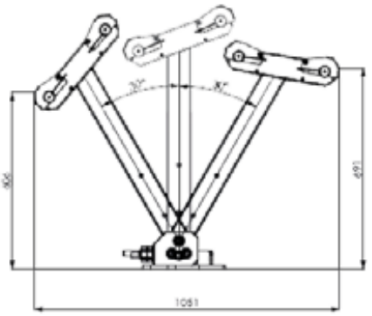



Explanations

Item No.	Designation	Material	Weight
7333976	Cantilever arm ASS-M	Stainless steel V4A	42 kg

Teufelberger Seil Ges.m.b.H. | Böhmerwaldstraße 20, 4600 Wels, Austria | T +43 (0) 7242 615-0 | E wirerope@teufelberger.com
www.teufelberger.com