HUBERT
amp up your process

Operating Manual

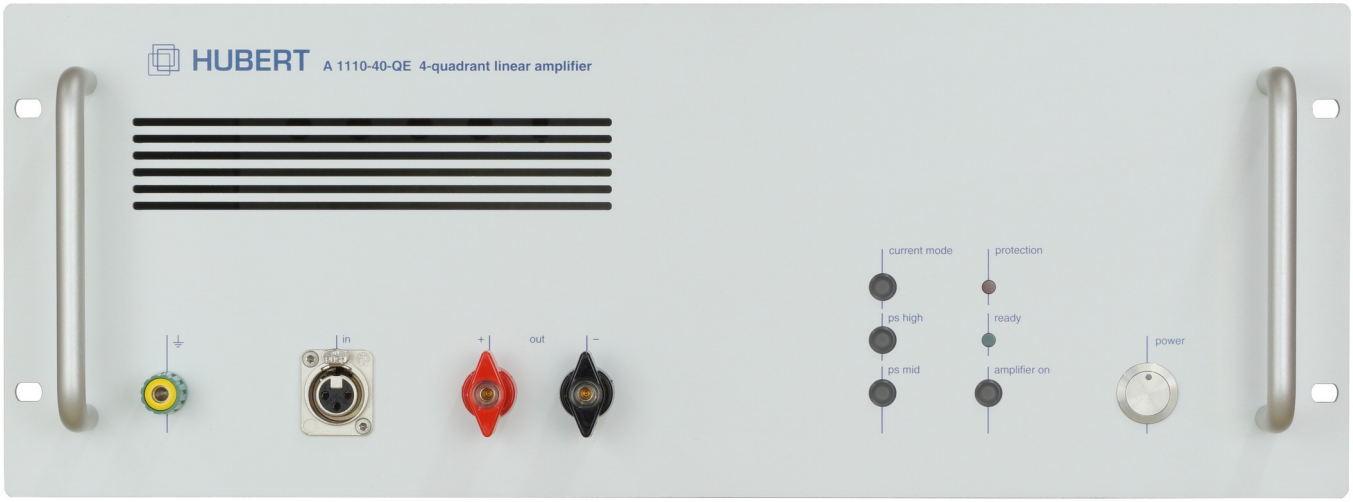

A1110 E-Series

4-Quadrant Voltage and Current Amplifier

MADE IN GERMANY

v1

Contents

1 Introduction....3
1.1 Product models....3
1.2 Scope of Delivery....4
2 For Your Safety....5
2.1 Used Symbols and Notations....5
2.2 General Safety Advice....6
2.3 Intended Use....7
2.4 User....8
3 Important Information for Initial Operation....9
3.1 Introduction....9
3.2 Connecting the Power Outputs....9
3.3 Parallel Operation (Voltage Amplifier)....10
3.4 Series Operation (Voltage Amplifier)....10
3.5 Series Operation of DC- and 4-Quadrant Power Amplifier....11
4 Operating Elements....12
4.1 Front Panel Elements A1110-40-QE/-05-QE....12
4.2 Back Panel Elements A1110-40-QE/-05-QE....15
5 Notes on Operation....17
5.1 General Information....17
5.2 Operating Voltages....17
5.3 Connecting the load....19
5.4 Initial Operation in Operating Mode Voltage Amplifier....19
5.5 Initial Operation in Operating Mode Current Amplifier....19
5.6 Sensing....22
5.7 Adjustable Output Resistance....23
6 Applications....26
7 Application software....27
8 Integration into Automated Test Systems....28
8.1 Remote Controls....28
8.2 Error-Codes....31
9 Maintenance, Support and Service....32
9.1 Maintenance and cleaning....32
9.2 Service....32
10 Decommissioning and Disposal....33
10.1 Decommissioning....33
10.2 Disposal....33
11 Warranty and disclaimer....33
12 EU Guidelines....33
13 Contact....34
14 Document History....35

1 Introduction

1.1 Product models

These operating instructions are valid for the following models:

- A1110-05-E (Rev. B)
- A1110-16-E (Rev. B)
- A1110-16-E-100 (Rev. B)
- A1110-40-E-70-32 (Rev. B)

1.2 Device Description

The A1110-40-E is a linear, extreme-broadband, precision power amplifier designed for all applications which require fast-changing signals with high performance.

The A1110-40-E can be operated as a voltage amplifier or current amplifier. The current amplifier offers a constant, frequency-invariant output current for inductive loads.

Three optional operating voltages per polarity are available for high-voltage/low-current or low-voltage/high-current applications. The voltage switch-over can be implemented optionally as manual. Especially in case of very low-impedance loads, the operating voltage can be reduced to 1/3 which is associated with a corresponding reduction of the power loss.Output voltage and output current can be limited and observed on low-impedance monitor outputs.

The device is equipped with a temperature-controlled, quietly-running fan. As well as an over-temperature protection, a power-loss calculation and an absolute-current monitoring guarantees perfect short-circuit and overload protection.

An interlock offers the possibility of a remote-controlled security system. The device can be operated by using elements on the front panel. Additionally the device can be controlled with the supplied A1110 Control Software via an USB or Ethernet connection.

The functionality of the device can be further extended with various product options. You can find more information on this at www.drhubert.de on the respective product pages.

NOTICE

Always read the enclosed data sheet

The separate data sheet is part of these operating instructions and must also be read and understood. Device-specific modifications on customer request can only be found in the data sheet! The data sheet is part of the scope of delivery of the device and can be downloaded from our website www.drhubert.com.

amp up your process

1.3 Scope of Delivery

- Power cable
- USB cable
- Adapter BNC/XLR
- USB thumb-drive including
  - Application software HUBERT A1110 Control
  - Manual HUBERT A1110 Control
  - This manual
  - Datasheet

amp up your process

2 For Your Safety

2.1 Used Symbols and Notations

2.1.1 Warning Level

DANGER

Type and source of danger

Indicates an imminently hazardous situation which, if not avoided, will result in death or serious injury.

WARNING

Type and source of danger

Indicates a potentially hazardous situation which, if not avoided, could result in death or serious injury.

CAUTION

Type and source of danger

Indicates a potentially hazardous situation which, if not avoided, could result in minor or moderate injury or property damage.

NOTICE

Type and source of danger

Indicates important information about the product or procedures that should be considered for the correct functioning of the device.

2.1.2 Used Warning Symbols



Warning about a dangerous voltage



Warning about general danger



Description of what should be done or what to pay attention to

amp up your process

2.2 General Safety Advice

The following general safety instructions must be observed during the use of this device. Disregarding this advice or specific warnings in this manual will violate safety standards in the intended uses of this equipment.

The manufacturer is not responsible for consequences resulting from disregarding the advice and warnings.

DANGER

Electrical voltage – Danger of electric shock

Parts under voltage:

Always cover all parts under voltage that inevitably arise during operation.

Touching of cables, sockets and plugs:

Never touch the contacts of cables, sockets or plugs directly after disconnecting them, as there is a risk of electric shock.

Contact between amplifier outputs and PE:

Touching an amplifier output and PE at the same time can result in a life threatening electric shock.

Earth the device:

The device fulfills the requirements for protection class I. To avoid the risk of electric shock, the device housing must be earthed and therefore always operate the device via the supplied three-core power cable with protective conductor. The mains cable may only be plugged into a grounded socket with a protective earth contact. An interruption of the protective earth conductor inside or outside the device reduces the safety of the device and is prohibited.

Safety Regulations for the work with electrical equipment:

- Disconnect mains!
- Prevent reconnection!
- Test for absence of harmful voltages!
- Ground and short circuits!
- Cover or close of nearby live parts!

Devices with a heavy current connection:

Devices with a heavy current connection may only be operated via a 4-pole RCD with ≤40 ms at 5 x $I_{\Delta n}$. If it is not possible to install the RCD in the building installation, then our device must be connected to the mains supply via a mobile distributor with the appropriate RCD.

Do not open the housing:

Covers must not be removed by the operating personnel. Maintenance and repair work is reserved exclusively for qualified service personnel.

amp up your process

CAUTION

Important notes

The device must be used exclusively for its intended purpose.

The device is only approved for operation within the connected loads specified on the type label.

Do not insert any mechanical parts, especially metal parts, into the device through the ventilation slots.

Protect the unit from moisture, humidity and condensation. Avoid using liquids near the device.

Never connect loads while the amplifier outputs are switched on.

Operate the device exclusively on the public power supply system (no generators/UPS).

To avoid personal injury and property damage, make sure that the equipment and components used in the test are not overloaded. Read all operating instructions for the devices used thoroughly and ensure that all defined device limits are adhered to. If there are doubts about the suitability of the devices for the test to be performed, contact the manufacturer of the device.

2.3 Intended Use

2.3.1 Hardware

The device is intended exclusively for use as an LF power amplifier. Typical applications are the operation as voltage and current amplifier on low impedance passive loads. Active loads are only permitted under certain conditions in agreement with the manufacturer.

CAUTION

Operation on active loads

Active loads are only permitted under certain conditions in agreement with the manufacturer.

The device may only be operated within the technical data and under the ambient conditions specified in this manual.

Changes to the device are not permitted without the consent and release of the manufacturer. Proper and safe operation of the device requires correct installation and careful operation. This manual is part of the device and must always be accessible to the user. Observe all safety regulations listed in this manual.

CAUTION

The improper use leads to the exclusion of any liability claims.

The operator alone is liable for all damage caused by improper use.

2.3.2 Software

‘A1110 Control’ and ‘A1500 Control’ are software developed to control and configure HUBERT power amplifier. Take into account technical data and applications described in this manual. Changes to the software are not permitted without the consent and release of the manufacturer. Proper and safe operation of the software requires correct installation and careful operation. This

amp up your process

manual is part of the software and must always be accessible to the user. Observe all safety regulations listed in this manual.

2.4 User

Operation may only be performed by qualified persons.

CAUTION

Reading and understanding the operating instructions

Never use the device without having read and understood the operating instructions. Always contact the manufacturer if you have any questions.

Qualified persons within the meaning of the safety instructions in this manual are authorized persons for commissioning and operating systems in accordance with the standards of safety technology.

DANGER

Risk of injury in case of insufficient qualification

Improper work can lead to personal injury and damage to property. Any work may only be carried out by persons who have the necessary training, knowledge and experience.

amp up your process

3 Important Information for Initial Operation

3.1 Introduction

It is imperative that the following operating instructions for the 4-quadrant power amplifier and the connected peripherals are read before installation and commissioning. Further information can be found in „White Paper No. 1“ on our website www.drhubert.com.

It is also imperative that the following operating instructions for the 4-quadrant power amplifier and the connected peripherals are read before installation and initial startup. Furthermore, the configuration and initial startup of the amplifier with the connected load must be carried out by appropriately trained and qualified personnel.

CAUTION

Monitoring of output current and output voltage

The monitor outputs of the fast 4-quadrant power amplifier should always be used to monitor the voltage and current at the DUT in order to detect unwanted RF oscillations or other instabilities (extensive overshoots) at an early stage.

3.2 Connecting the Power Outputs

Do not connect the 4-quadrant power amplifier output to any other amplifier, external power supply, signal source or other active, inappropriate loads. These special electrical components are not excluded as a load in principle but it requires a suitable security concept.

NOTICE

Application Support

In the implementation of your application, our technical support is happy to help!

CAUTION

Overvoltage at the Power Output

The amplifier has no protection against overvoltage at the power output!

Example: In the case of an inductive load, switching off the amplifier can lead to high voltages at the outputs and possibly to the destruction of the 4-quadrant power amplifier.

Take the appropriate safety measures (see option "Overvoltage Protection").

CAUTION

Do not connect the outputs to the signal ground or the protective earth!

Multiple earthing can lead to unstable operation or interfere with current monitoring.

amp up your process

3.3 Parallel Operation (Voltage Amplifier)

By connecting several 4-quadrant power amplifiers in parallel, the output current can be increased.

For safe operation it is absolutely necessary to

- only use identical amplifier models
- observe the wiring instructions and cable specifications for stable signal processing (e.g. equal cable length)
- ensure adequate mains supply
- ensure contact protection at the power outputs, life-threatening voltages can occur

For the operating mode "current amplifier" please contact our technical support.

CAUTION

Parallel operation with an external active load or source is not permitted!

3.4 Series Operation (Voltage Amplifier)

By connecting several 4-quadrant power amplifiers in series, the output voltage can be increased.

For safe operation it is absolutely necessary to

- only use identical amplifier models
- observe the wiring instructions and cable specifications for stable signal processing
- ensure adequate mains supply
- ensure contact protection at the power outputs, life-threatening voltages can occur

For the operating mode "current amplifier" please contact our technical support.

CAUTION

Series operation with an external active load or source is not permitted!

For the operating mode "current amplifier" please contact our technical support.

amp up your process

3.5 Series Operation of DC- and 4-Quadrant Power Amplifier

In a series connection of a DC source and a 4-quadrant power amplifier, systems with different transmission characteristics (e.g. slew rate) and operating voltages are often used. Communication between the systems is also not always guaranteed.

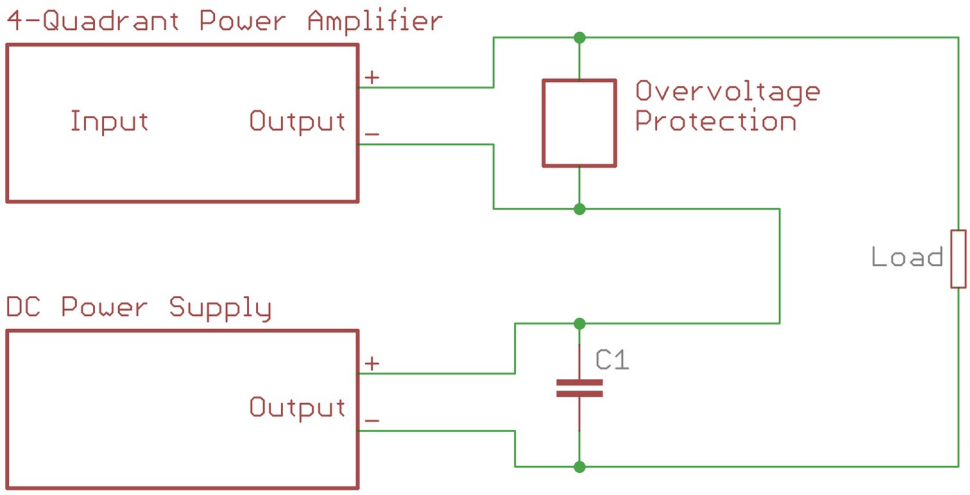

Figure 1: DC- and AC-Source (4-Quadrant Power Amplifier) in Series Operation

In the event of an error (for example the over-current protection of the power amplifier triggers, i.e. the output becomes high-impedance), this can lead to voltages at the amplifier output that are (permanently) above its supply voltage. Permanently if the DC source does not turn off.

CAUTION

Overvoltage at the Power Output

The amplifier has no protection against overvoltage at the power output!

NOTICE

Overvoltage Protection

The device option "Overvoltage Protection" offers convenient overvoltage protection.

amp up your process

4 Operating Elements

4.1 Front Panel Elements A1110-05-E

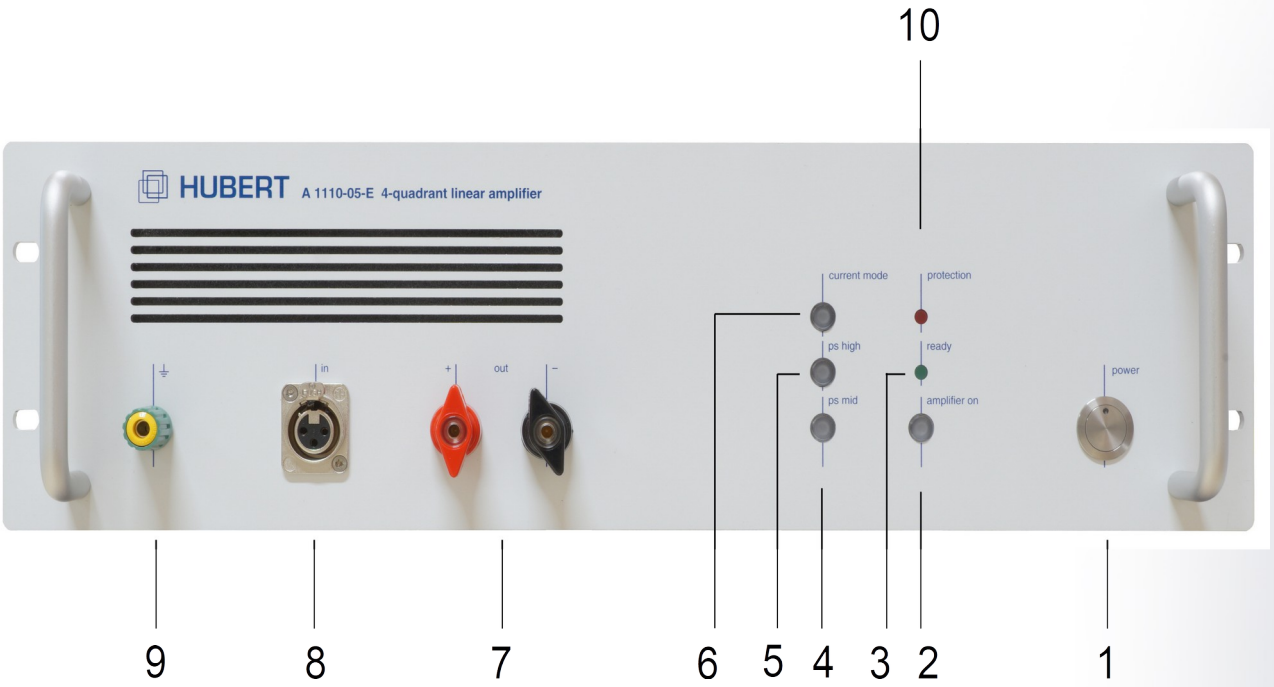

Figure 2: Frontpanel A1110-40-E

[1] POWER BUTTON

On / Off switch.

(Here is implemented the switchover ready to operate / standby. The standby mode is signaled by the weakly-lit, blue LED. The power supply disconnection is implemented with the switch on the rear side.)

⚠ CAUTION ⚠

Do not switch under load!

[2] AMPLIFIER ON BUTTON

Green LED lights up, the amplifier is switched on.

[3] READY LED

Green LED lights up when the amplifier is ready for operation.

[4] PS MID BUTTON

Operating voltage switch

Yellow LED lights up at medium operating voltage

[5] PS HIGH BUTTON

amp up your process

Operating voltage switch

Yellow LED lights up at high operating voltage

If both LEDs, PS MID and PS HIGH, are off, the automatic operating voltage switch is activated.

[6] OUT+ / OUT-

Binding posts with flat clamp, amplifier output

Off-ground structure, reference potential (minus socket) is not connected with protective ground conductor.

⚠ CAUTION ⚠

Do not connect outputs with signal ground or protective ground conductor!

[7] IN

Symmetrical signal input; Insulated XLR socket

Pin1 = GND

Pin2 = +Signal

Pin3 = -Signal

The enclosed BNC-XLR adapter serves for the connection of asymmetric sources or Pin1 and Pin3 must be connected.

[8] GROUND SOCKET

Internal connection with the protective ground conductor.

[9] PROTECTION LED

Signals the intervention of a protection mechanism.

Red LED lights up constantly: Over-temperature disconnection; the device switches on automatically after the drop of the temperature.

Red LED flasahes slowly(≈ 1/s): Disconnection because of exceeding the permissible power loss.

Red LED flashes fast (≈ 3/s): Hardware defective! The device must be sent to the manufacturer.

amp up your process

4.2 Back Panel Elements A1110-40-QE/-05-QE

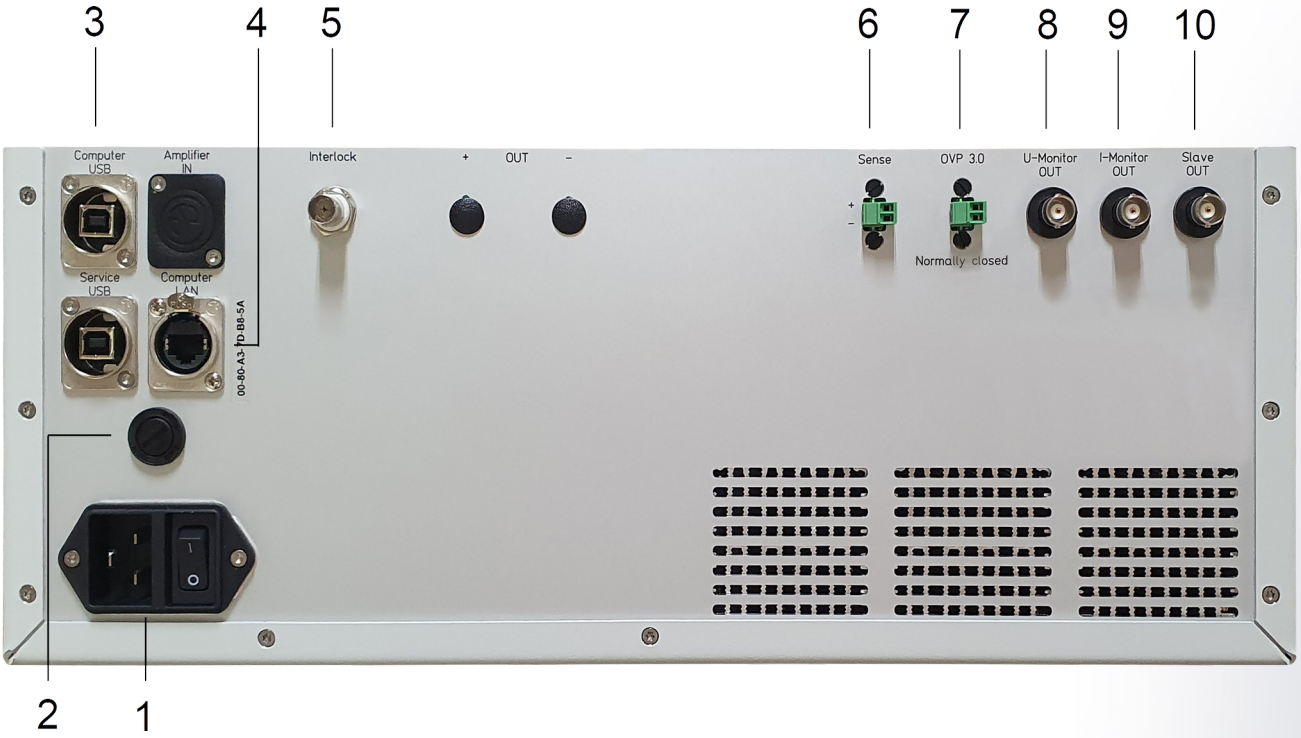

Figure 4: Backpanel A1110-16-E/40-E-70-32

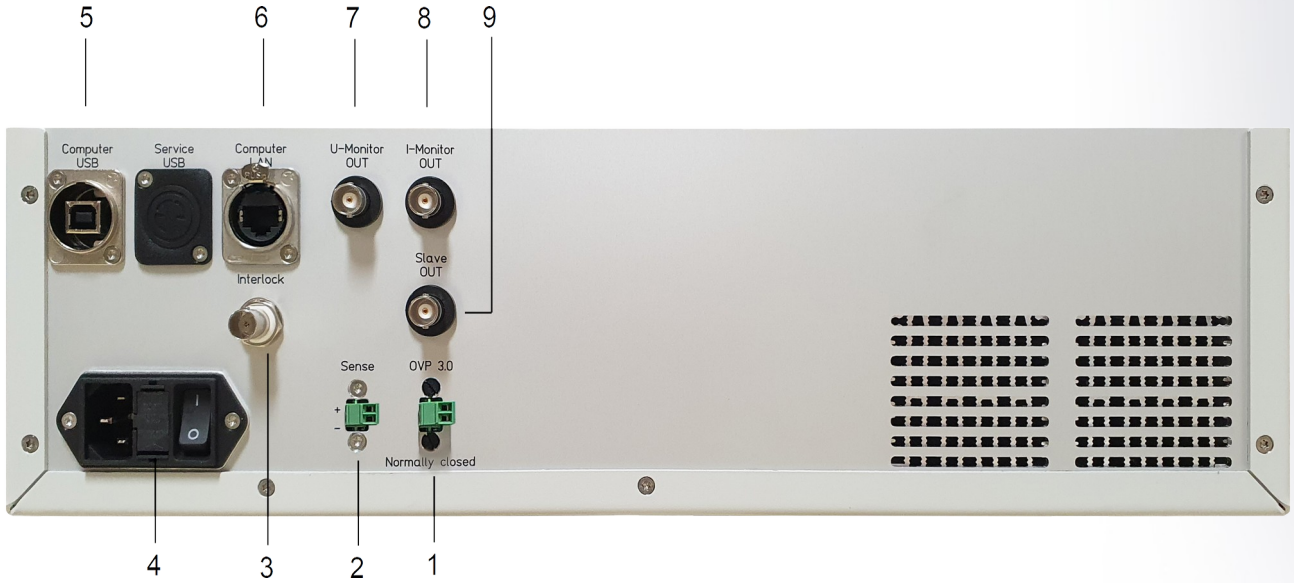

Figure 5: Backpanel A1110-05-E

[1] POWER PLUG WITH MAINS SWITCH

Power Supply

[2] FUSE HOLDER

For fuses 32x6.3 mm

[3] COMPUTER USB

USB-B socket for connection to a computer

amp up your process

[4] COMPUTER LAN

RJ45 socket for connection to a network

[5] INTERLOCK

BNC socket with short-circuit plug.
Remote-controlled safety system enables the amplifier to be switched off by an external switch (normally closed contact).
LED indicators when shutdown is triggered: Amplifier On off and Ready on.

[6] SENSING

The DC voltage drop on the load line can be regulated between 0.5 V and 2 V. Observe polarity!

[7] OVP-PROTECTION OUT (OPTIONAL)

Galvanically isolated transistor switching output for monitoring overvoltages at the amplifier output.

[8] U-MONITOR OUT

Isolated BNC socket. Signal output for monitoring the amplifier output voltage.

[9] I-MONITOR OUT

Isolated BNC socket. Signal output for monitoring the amplifier output current.

[10] SLAVE OUT

Isolated BNC socket. Signal output for controlling an additional amplifier.

amp up your process

5 Notes on Operation

5.1 General Information

Make sure there is enough space behind and in front of the amplifier to allow air to circulate freely through the unit. Cool air is sucked in through the slots on the left and right sides of the front panel. Do not connect the amplifier to the power outlet until input and output are wired. Allow the amplifier to warm up for 15 minutes after power-up to stabilize its operating points.

5.2 Operating Voltages (A1110-05/16-E and A1110-05/16-E-100)

CAUTION

Check your product model

This chapter applies only to the models mentioned. Read the appropriate chapter for your product to prevent damage to the device.

Before you start "amplifying", we recommend that you consider the choice of operating voltage for effective and safe operation of the A1110-40-QE (see also White Paper No.1: Hubert Power Amplifier).

The amplifiers of the E series have three operating voltages:

- high operating voltage (±90 V*) for high output voltages and low load currents
- medium operating voltage (±60 V) for medium output voltages and medium load currents.
- low operating voltage (±30 V) for low output voltages and high load currents

(* The high operating voltage of the A1110-05/16-E-100 is ±110 V.)

To keep the power loss of the amplifier low, the operating voltage should always be selected according to the load.

Example:

The load current I_L should be 5 A_{DC}.

Load 1: R_L = 10 Ω

For I_L = 5 A_{DC}, an output voltage U_a = 50 V_{dc} is required ($U_a = I_L * R_L$). The power loss P_V at the output stage results from the voltage drop at the output stage multiplied by the current through the output stage:

$P_V = (U_B - U_a) * I_L = (90\ V - 50\ V_{DC}) * 5\ A_{DC} = 200\ W$

Load 2: R_L = 1 Ω

An output voltage U_a = 5 V_{DC} is required for the same load current I_L = 5 A_{DC}. The power loss at high operating voltage is therefore

$P_V = (U_B - U_a) * I_L = (90\ V - 5\ V_{DC}) * 5\ A_{DC} = 425\ W$

If you now switch to the operating voltage U_{low}, the following picture emerges:

$P_V = (U_B - U_a) * I_L = (30\ V - 5\ V_{DC}) * 5\ A_{DC} = 125\ W$

As you can see from this example, it makes more sense to operate the amplifier with a low operating voltage for low-impedance loads and with a high operating voltage for high-impedance loads.

An illustration with the maximum output voltages and output currents (U-I plot) can be found in the data sheet Operating voltages (A1110-40-E-70-16 and A1110-40-E-70-32)

CAUTION

Check the exact model name!

This chapter only applies to the specified model. Read the chapter that applies to your product to prevent damage to the appliance.

The A1110-40-E-70-16 and A1110-40-E-70-32 models are optimized for applications that primarily require positive output voltages, such as test systems for automotive standards.

In principle, the same considerations apply here as in chapter 3. The operating voltage should always be selected according to the load:

- High operating voltage for high output voltages and low output currents
- Low operating voltage for low output voltages and high output currents

The A1110-40-E-70-16 and A1110-40-E-70-32 have three positive and one negative operating voltage, which can be selected manually.

For further information, please refer to the data sheet.

5.3 Connecting the load

The A1110-E series has a balanced signal input (balanced input) which offers advantages for long signal paths (see also White Paper No.4: Balanced Input). If your signal source does not have a balanced output, the signal can also be transmitted unbalanced using a BNC/XLR adapter (included accessory). Always use high-quality shielded cables with low capacitance (<60 pF/m) for cabling.

5.4 Initial Operation in Operating Mode Voltage Amplifier

Connect the mains cable and switch on the mains voltage at the mains switch. The illuminated **power** button signals standby and you can switch the device on.

After a short time, ready lights up and the amplifier is now **ready** for operation.

Start the software and establish a data connection with the amplifier. Select the **Voltage Mode** operating mode and the required operating voltage according to your application. Use **Amplifier On** to switch on the signal input and the power output and signal processing can begin.

CAUTION

Do not switch off the mains supply under load!

The corresponding signal forms can be controlled at the **Voltage Monitor Out** and **Current Monitor Out** outputs.

amp up your process

5.5 Initial Operation in Operating Mode Current Amplifier

In the “current control” operating mode, the A1110-E behaves like a voltage-controlled current source and supplies an almost frequency-independent constant load current to an inductive load. Figures 5 and 6 show examples of the transients of the output voltage and current in the “current control” and “voltage control” operating modes on an inductor.

NOTICE

With this device the current mode is blocked ex works!

If you need to activate it, please contact our support team and ask for specific advice regarding your project.

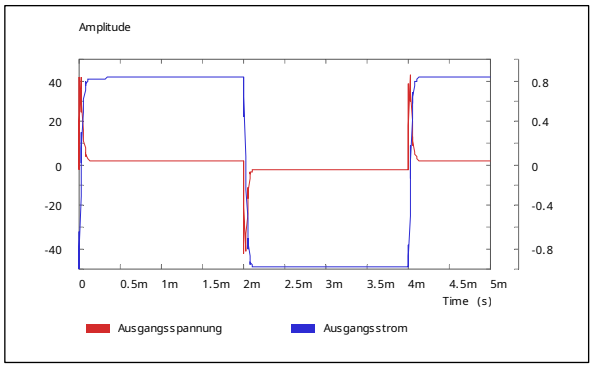

Figure 5: Controlled Current Mode

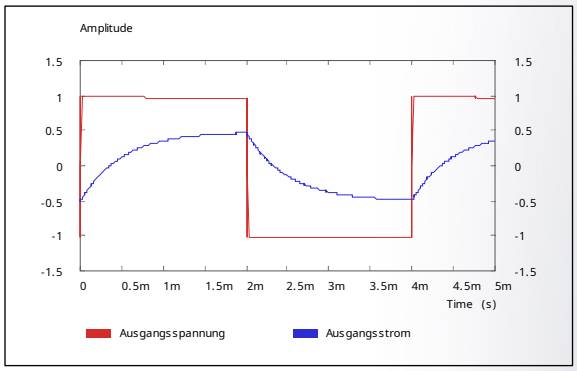

Figure 6: Controlled Voltage Mode

Since the load is an integral part of the control in the “Current control” operating mode, the amplifier must be compensated with an RC network adapted to the load for stability reasons.

Since the load represents an integral part of the control in the "current control" mode, the amplifiermust be compensated for stability reasons with an RC network adapted to the load.

The following instructions for safe operation of the A1110-40-QE must also be observed:

1. Never put the amplifier into operation without load.
2. A DC current path must always be existing through the load.
   Never employ capacitors in the signal path.
3. Wire up the amplifier completely before operational startup.
4. Pay attention to correct compensation.
5. Monitor the output current for stability.
6. Do not change the operating mode during operation.

amp up your process

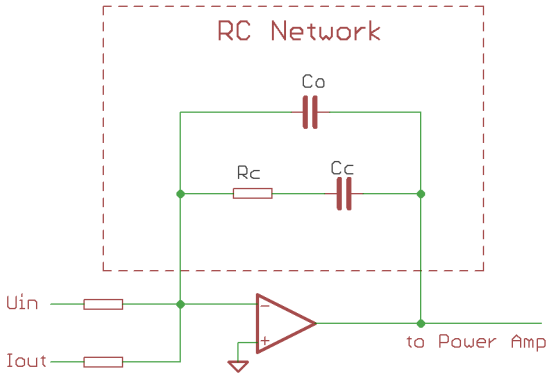

Figure 9: Simplified Current Controller

The figure above shows the RC network required for the current controller.

If no customer-specific solution was required, the following networks are equipped ex works:

No	Load	Rc	Cc	Current Range
1	1 Ohm + 500 µH	100 kΩ	10 nF	high
2	0,1 Ohm + 200 µH	68 kΩ	4,7 nF	high
3	1 Ohm + 1mH	150 kΩ	22 nF	high
4	4 Ohm + 1,8 mH	200 kΩ	1 nF	high
5	*Reserved for Option-01*			
6	*Reserved for Option-01*			

Table 1: Compensation networks

The selection is made by software. Please also note the corresponding recommended current measuring range.

Network No 7 allows the determination of a suitable compensation by means of a switchable capacitor bank and a variable resistor.

After you have wired the amplifier and **connected it to the load**, you can enable the mains voltage at the mains switch. The illuminated **power** button signals standby and you can switch on the unit. After a short time, the **Ready LED** is lit and the amplifier is now ready for operation.

Start the software for further settings and retrieving its status. Now establish a data connection to the amplifier. Select the required operating voltage and the required compensation network according to your application.

- Activate the **Current Mode.** This connects the amplifier output to the load → the control loop is closed.
- Switch on the signal input and the power output by selecting **Amplifier On**. The signal processing can begin.

At the outputs **Voltage Monitor Out** and **Current Monitor Out**, the corresponding signal forms can be checked.

amp up your process

Leaving the Current Mode follows in reverse order:

- Switch off the external signal source
- Switch off the signal input with **Amplifier Off**
- Disable the **Current Mode**. The loade can now be removed from the amplifier output

CAUTION

Never remove the load from the amplifier output in Current Mode!

amp up your process

5.6 Sensing

Voltage drops occur via supply lines, which ensure that the entire voltage is not measured at the load. With the sensing option, the output voltage of the amplifier is regulated to such an extent that the desired voltage is present at the load. The internal voltage drop is thus compensated.

The option can be controlled via our “HUBERT A1110 Control” software or via a command set.

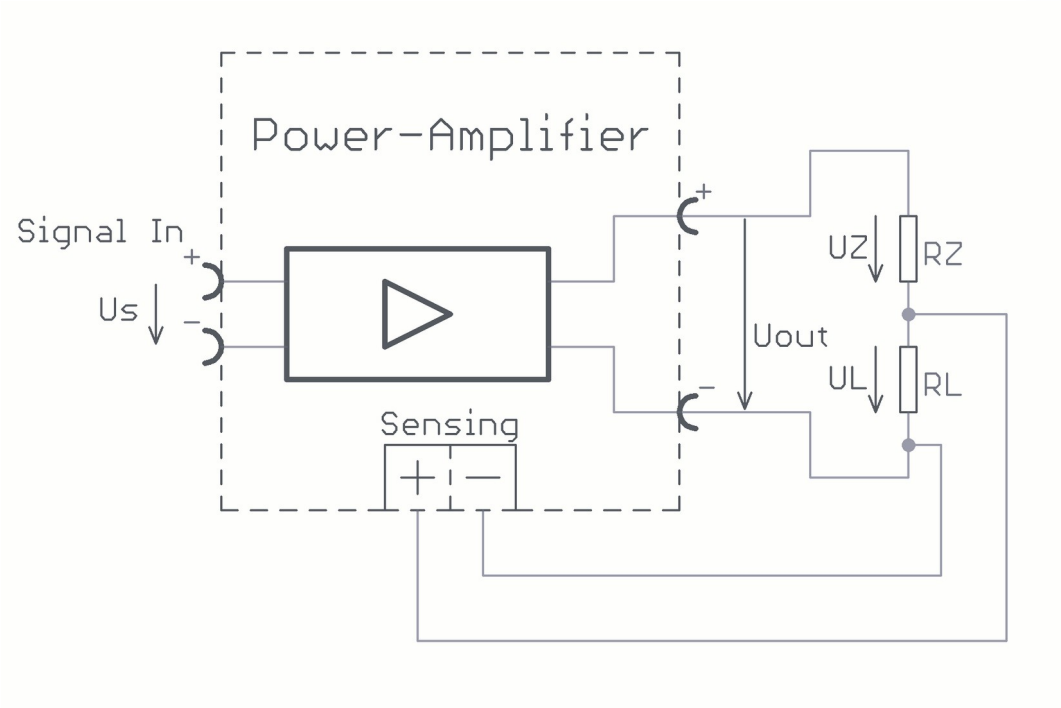

Figure 10: Exemplary test setup with sensing option used

In the standard case, sensing is deactivated (0 mV). Without active sensing, a lower voltage drops across the load (RL) due to the supply line resistance (RZ). If sensing is activated to 500 mV, 1000 mV or 2000 mV via the application software, the amplifier compensates for the voltage drop via the lead resistance. This means that the voltage at the load corresponds to the input voltage multiplied by the gain factor of the amplifier (x10). The voltage value set for sensing indicates the maximum readjusted voltage.

amp up your process

5.7 Adjustable Output Resistance

This extension complements our A1110 series power amplifiers with a programmable internal resistance. This option allows the amplifier output resistance, which is a few milliohms, to be compensated to zero. Depending on the requirements, the internal resistance of the power amplifier can be set from 0 mΩ to 200mΩ with a resolution of 1mΩ. The option is optimized for DC voltage operation. This option is used for electrical testing of electrical and electronic components in motor vehicles in accordance with the LV124 or VW80000, VW80300, etc. standards.

The option can be controlled via our “HUBERT A1110 Control” software or via a command set.

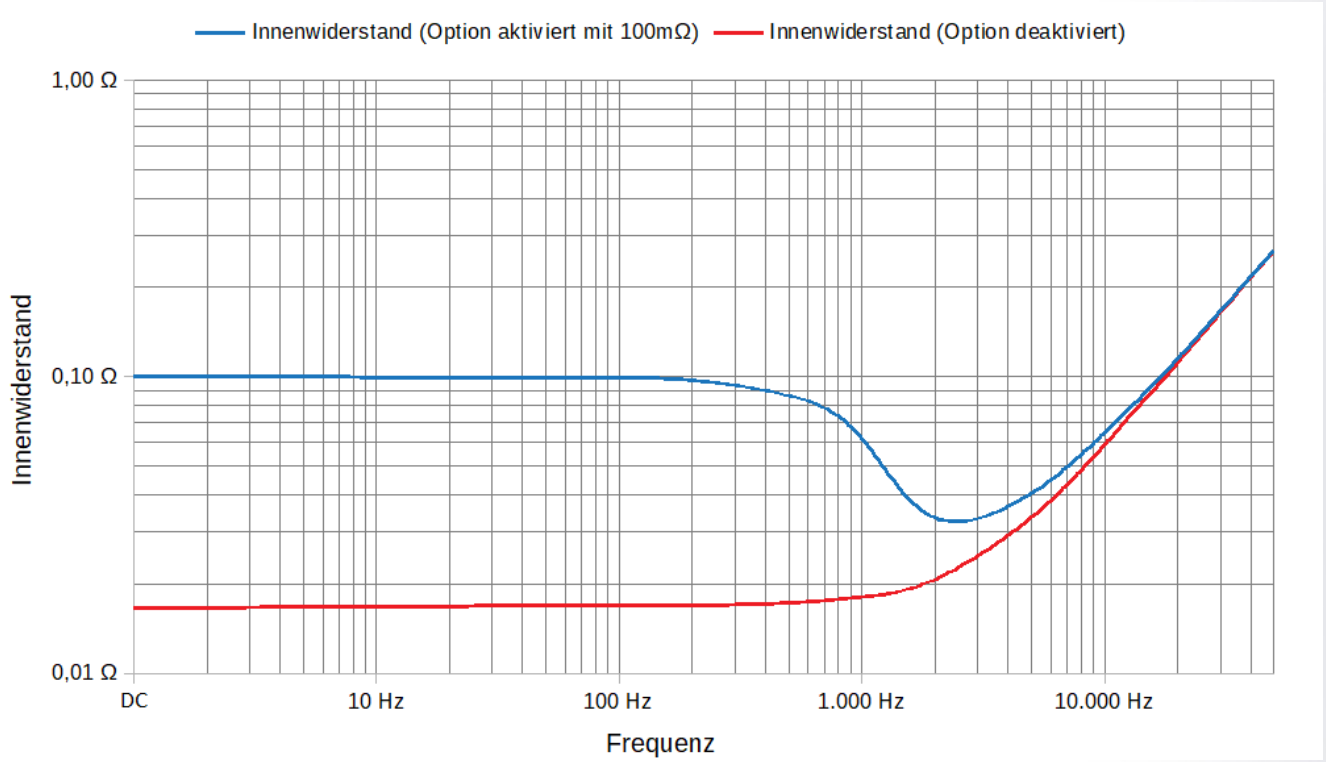

Figure 11: internal resistance vs. frequency

NOTICE

When using the “Adjustable output resistance”, you must have selected the Voltage mode and it must not be used at the same time as the Sensing option.

amp up your process

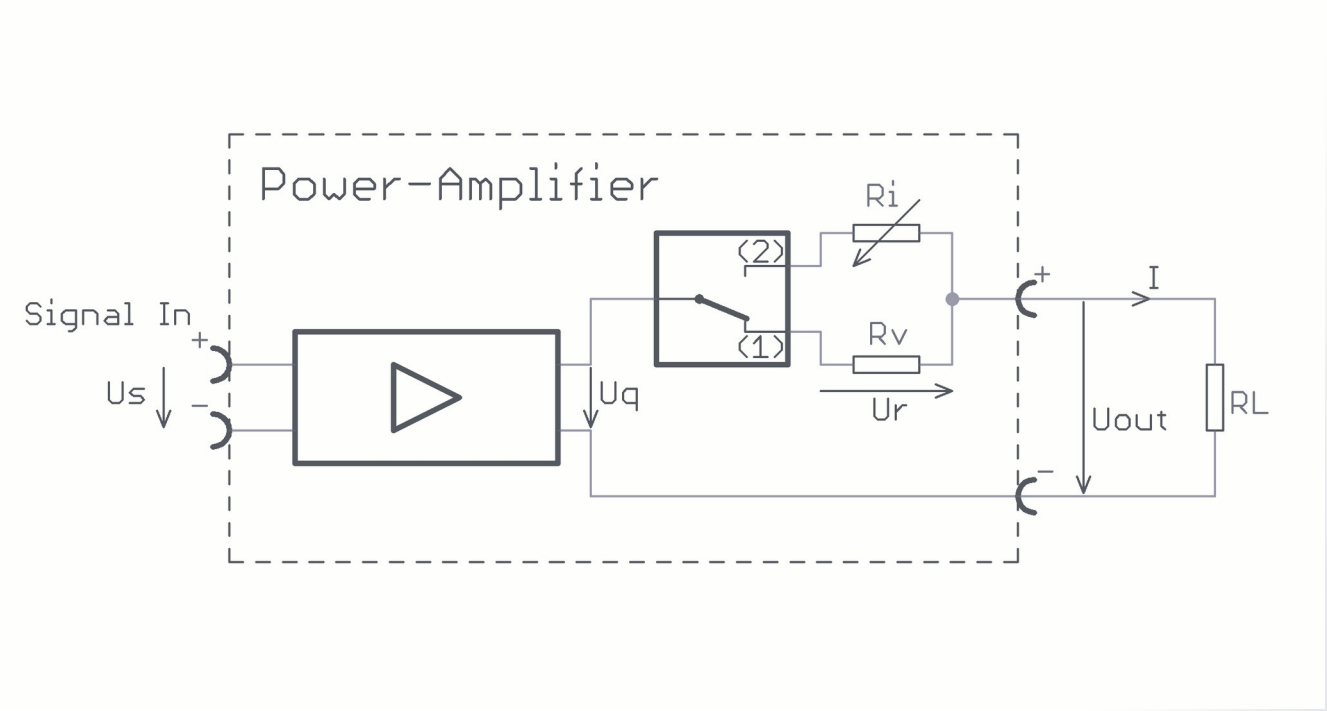

Figure 12: Power amplifier with adjustable output resistance

Amplifier output resistance: Rv ≈ 17 mΩ (different for each amplifier / see data sheet)

Adjustable output resistance: Ri = 0...200 mΩ (variable)

Switching the output resistors: [1] Option deactivated, [2] Option activated

Load: R_L = 1 Ω

Input Signal: U_s = 1 V_{DC}

- IDLE

  In this operating mode, no load is connected to the output terminals, so no output current flows (I = 0 A_{DC}). For U_s = 1 V_{DC}, Uq = 10 V_{DC} (amplification factor = 10) is obtained. As there is no voltage drop across Ur (Ur = R_v * I = 17 mΩ * 0 A_{DC} = 0 V_{DC} or U_r = R_i * I = 100 mΩ * 0 A_{DC} = 0 V_{DC}), the voltage is present at the output terminals (U_q = U_{out}).

- WITH LOAD (OPTION DEACTIVATED [1])

  Now we connect a load to the output of the amplifier and obtain the current I = U_q / (R_v + R_L) = 10 V_{DC} / (17 mΩ + 1 Ω) = 9,83 A_{DC}. This means that a voltage of U_r = R_v * I = 17 mΩ * 9,83 A_{DC} = 0,17 V_{DC} drops across the amplifier output resistor. The output voltage at the amplifier is now U_{out} = U_q - U_r = 10 V_{DC} – 0,17 V_{DC} = 9,83 V_{DC}.

- WITH LOAD (OPTION ACTIVATED [2] R_i = 0 Ω)

  Now we activate the option and set an output resistance of R_i = 0mΩ and receive the electricity I = U_q / (R_i + R_L) = 10 V_{DC} / (0 mΩ + 1 Ω) = 10 A_{DC}. This means that a voltage of U_r = R_i * I = 0 mΩ * 10 A_{DC} = 0 V_{DC} drops across the adjustable output resistor. The output voltage at the amplifier is now U_{out} = U_q - U_r = 10 V_{DC} – 0 V_{DC} = 10 V_{DC}.

- WITH LOAD (OPTION ACTIVATED [2] R_i = 0,1 Ω)

amp up your process

If you change the output resistance to 100 mΩ, you get the current $I = U_q / (R_i + R_L) = 10 V_{DC} / (100 mΩ + 1 Ω) = 9{,}09 A_{DC}$. This means that a voltage of $U_r = R_i * I = 100 mΩ * 9{,}09 A_{DC} = 0{,}91 V_{DC}$ drops across the adjustable output resistor. The output voltage at the amplifier is now $U_{out} = U_q - U_r = 10 V_{DC} – 0{,}91 V_{DC} = 9{,}09 V_{DC}$.

6 Applications

Please find more information in sections „White Papers“ and „FAQs“ on our website www.drhubert.com.

amp up your process

7 Application Software

Our devices are supplied with the latest version of the HUBERT A1110 Control application software (see USB stick). Please refer to the software user manual for further operating instructions.

You can always find the latest version at www.drhubert.de

amp up your process

8 Integration into Automated Test Systems

The command set for integrating the A1110-E into automated test systems is described below. A command frame is defined as follows:

<length of the frame> <command word> <opt. parameter>

The commands described in this section are ASCII/hex values that are transmitted as hex numbers using a terminal program (e.g. HTerm, 9600 baud, 8 bits, one stop bit, no parity). These do not correspond to the SCPI standard and are defined as a pure byte protocol.

The amplifier sends either the command or parameters as confirmation for a received and executed command frame (see table below). The settings for the behavior in the event of power loss shutdown and restart are saved in the device. For example, the amplifier can be configured so that it switches on again automatically after a configurable time (10-254 s) in the event of a power loss switch-off.

8.1 List of commands

Command Frame (Tx)	Return (Rx)	Note and parameter description
<0x02><0x04>	<1 Byte>	Send the temperatur in °C
<0x02><0x05>	<0x05>	Setting the high operating voltage
<0x02><0x06>	<0x06>	Setting the low operating voltage
<0x02><0x0E>	<1 Byte>	Sending the power loss in % (0xFA = 100%)
<0x02><0x10>	<1 Byte>	Sending the device status: Bit 0: Ready Bit 1: Overload Bit 2: Overtemperature Bit 3: Don´t care Bit 4: Interlock aktiv Bit 5/6: Supply voltage 1-1 = ps high 0-1 = ps mid 0-0 = ps low Bit 7: Device on/off
<0x03><0x20> <Parameter>	<1 Byte>	Setting the switch-on configuration of the amplifier: Bit 0: Restart after Overload-Shutdown 0: deaktiviert 1: aktiviert Bit 1: don´t care Bit 2/3: supply voltage 1-1 = ps high 0-1 = ps mid 0-0 = ps low Bit 4 bis 7: must remain 0
<0x03><0x21> <Parameter>	<1 Byte>	Setting the switch-on delay time after an overload switch-off in seconds (0x0A bis 0xFE).
<0x02><0x22>	<1 Byte>	Sending the switch-on configuration of the amplifier (see above)
<0x02><0x23>	<1 Byte>	Sending the switch-on delay time after an overload switch-off in seconds.
<0x02><0x25>	<2 Bytes>	Sending Firmware Version (component 1) 1. Byte: Main-Revision

amp up your process

Command Frame (Tx)	Return (Rx)	Note and parameter description
		2. Byte: Sub-Revision
<0x02><0x27>	<0x27>	Setting the mid operating voltage
<0x03><0x28> <Parameter>	<0x28>	Sending mid operation voltage: 0x00: High 0x01: Low
<0x03><0x29> <Parameter>	<0x29>	Setting the prefered RC-network: 0x01 bis 0x07
<0x03><0x2A> <Parameter>	<0x2A>	Setting operation mode: 0x00: Voltage Mode 0x01: Current Mode
<0x03><0x2B><0x00>	<0x2B>	Rüeset Interlock in Latching-Mode
<0x04><0x2D> <1. Parameter> <2. Parameter>	<2 Bytes>	Setting Limit Controls: 1. Parameter: Highbyte (0x00 bis 0x0F) 2. Parameter: Lowbyte (0x00 bis 0xFF)
<0x0A><0x2E> <1. Parameter> <2. Parameter> <3. Parameter> <4. Parameter> <5. Parameter> <6. Parameter> <7. Parameter> <8. Parameter>	<0x2E>	Settting the extended switch-on configuration of the amplifier: 1. Parameter: Current measuring range 0x00: High 0x01: Low 2. Parameter: RC-Network 0x01 bis 0x07 3. Parameter: operating mode 0x00: Voltage Mode 0x01: Current Mode 4. Parameter: 0x00: es ist kein anderer Wert zulässig! 5. Parameter: Highbyte of the Limit Controls (0x00 bis 0x0F) 6. Parameter: Lowbyte of the Limit Controls (0x00 bis 0xFF) 7. Parameter: Interlock Mode 0x00: Latching 0x01: Live 0x02: Don‘t Care 8. Parameter: Limit Control 0x00: Current 0x01: Voltage
<0x02><0x2F>	<8 Bytes>	Setting the extended switch on configuration of the amplifier (s. above)
<0x03><0x35> <Parameter>	<1 Byte>	Switching the amplifier on/off: 0x00: off 0x01: on
<0x02><0x38>	<10 Byte>	Query the working parameters. 1st parameter: Current measuring range (see 0x28) 2nd parameter: RC network (see 0x29) 3rd parameter: Amplifier operating mode (see 0x2E) 4th parameter: Don't care 5. and 6. parameter: +Limit Control Value 7. and 8.parameter: -Limit Control Value 9. parameter: Interlock status (0: inactive; 1:active) 10th parameter: selected interlock mode (0:Latching; 1:Live; 2:Don't Care) 11th parameter: Limit Control Mode (0:Current; 1:Voltage)
<0x02><0x3A>	<2 Byte>	Query the firmware revision (component 2)
<0x02><0x42>	<1 Byte>	Querying the 1st error memory Bit 0: Transformer temperature exceeded Bit 1: Operating voltage limits exceeded Bit 2: Temperature exceeded

amp up your process

Command Frame (Tx)	Return (Rx)	Note and parameter description
		Bit 3: Power loss limits exceeded Bit 4: Low voltage detection on the controller Bit 5: Current limits exceeded Bit 6: Hardware error Bit 7: n.a.
<0x03><0x42><0x01>	<1 Byte>	Querying the 2nd error memory Bit 0: Overvoltage protection Bit 1: Open loop Bit 2: n.a. Bit 3: n.a. Bit 4: Current limit exceeded (pulse) Bit 5: Current limit exceeded (emergency brake) Bit 6: Current limit exceeded (low current range) Bit 7: n.a.
<0x02><0x51>	<0..128 Bytes>	Sending device ID
<0x82><0x52> <128 ASCII Parameter>	<0x52>	Setting Device ID (blank 0x20) Default: `"Device #1"`
<0x03><0x53> <Parameter>	<0x53>	1. Parameter: Setting of the Limit Control (0x00: Current; 0x01: Voltage)
<0x03><0x5D> <Parameter>	<0x5D>	1. Parameter: Settting the Sensing Option (0: off; 1: 500mV; 2: 1000mV; 3:2000mV)
<0x02><0x5E>	<1 Byte>	Sendíng the Sensing Parameters (0: off; 1: 500mV; 2: 1000mV; 3: 2000mV)

Table 2: Remote-Befehle

8.2 Error-Codes

Code	Description
0xFC	Illegal command. The option may not be available.
0xFD	Timeout. An incomplete command frame was received.
0xFE	Unknown command.

Table 3: Error-Codes

amp up your process

9 Maintenance, Support and Service

9.1 Maintenance and cleaning

The device is maintenance-free. A factory calibration can be carried out if required. The frequency of the factory calibration is determined by the operator.

Only clean the device with a damp cloth. Only use solvent-free cleaning agents without aggressive components.

9.2 Service

If you have any further questions about this product, please visit the support area on our website www.drhubert.de.

amp up your process

10 Decommissioning and Disposal

10.1 Decommissioning

1. Turn off the device.
2. Unplug the power plug.
3. Remove all cables.
4. Store the device in its original packaging or equivalent.

10.2 Disposal

Dispose of the device in accordance with local regulations for the disposal of electrical and electronic components.

11 Warranty and disclaimer

Dr. Hubert GmbH warrants this amplifier product for normal use and operation within specifications for a period of two (2) years from date of shipment and will repair or replace any defective product which was not damaged by negligence, misuse, improper installation, accident or unauthorized repair or modification by the buyer. This warranty is applicable only to defects due to material or workmanship. Dr. Hubert GmbH disclaim any other implied warranties of merchantability or fitness for a particular purpose. Dr. Hubert GmbH will not be liable for any indirect, special, incidental, or consequential damages (including damages for loss of profits, loss of business, loss of use or data, interruption of business and the like), even if Dr. Hubert GmbH has been advised of the possibility of such damages arising from any defect or error in this manual or product.

12 EU Guidelines

This device complies with the relevant European Union harmonisation legislation:

- EMC Directive
- Low Voltage Directive
- RoHS Directive

amp up your process

13 Contact

Dr. Hubert GmbH
Dietrich-Benking-Str. 41
44805 Bochum

Tel. +49 234 970569-0
Fax. +49 234 970569-29
helpdesk@drhubert.de

For further information visit our website at www.drhubert.de.

amp up your process

14 Document History

Document Version	Date	Description
1	June 2025	Merging the instructions for models A1110-05-QE and A1110-40-QE

amp up your process