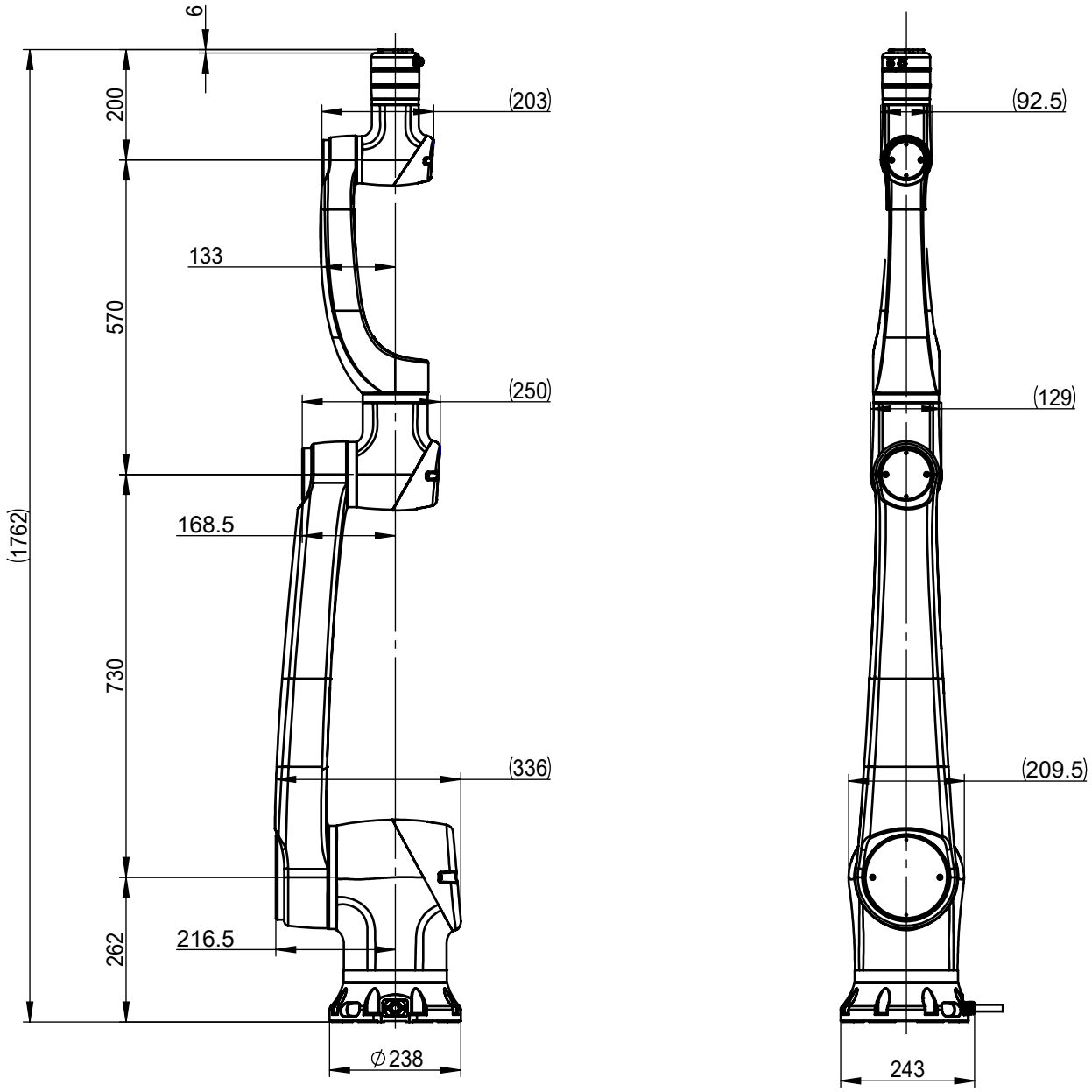
6
200
570
730
262
(1762)
(203)
133
(250)
168.5
(336)
216.5
∅238
(92.5)
(129)
(209.5)
243

MyCo-15-1.30

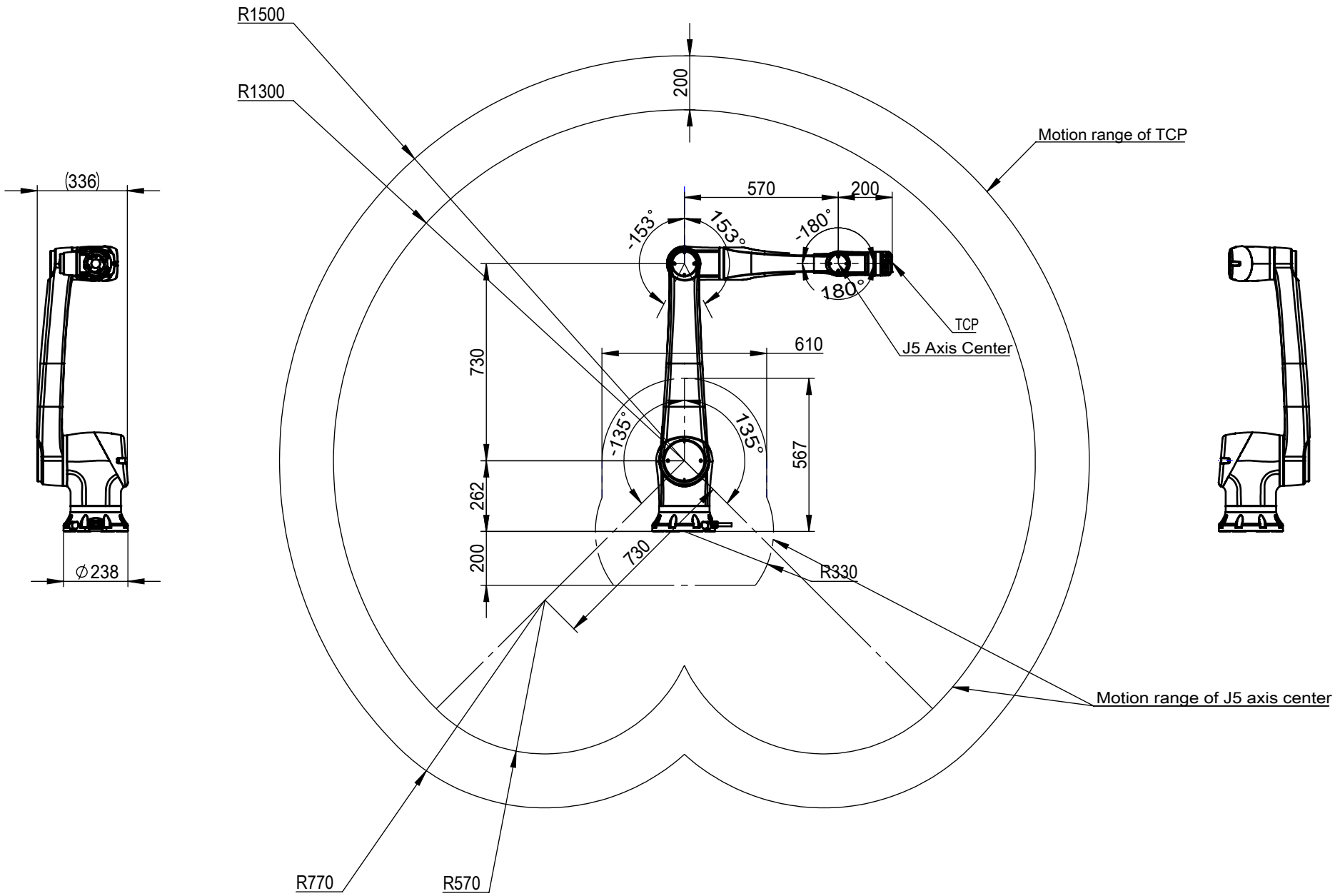
R1500
R1300
200
Motion range of TCP
(336)
570
200
-153°
153°
-180°
180°
TCP
J5 Axis Center
610
730
-135°
135°
567
262
200
730
R330
Motion range of J5 axis center
ϕ238
R770
R570

MyCo-15-1.30

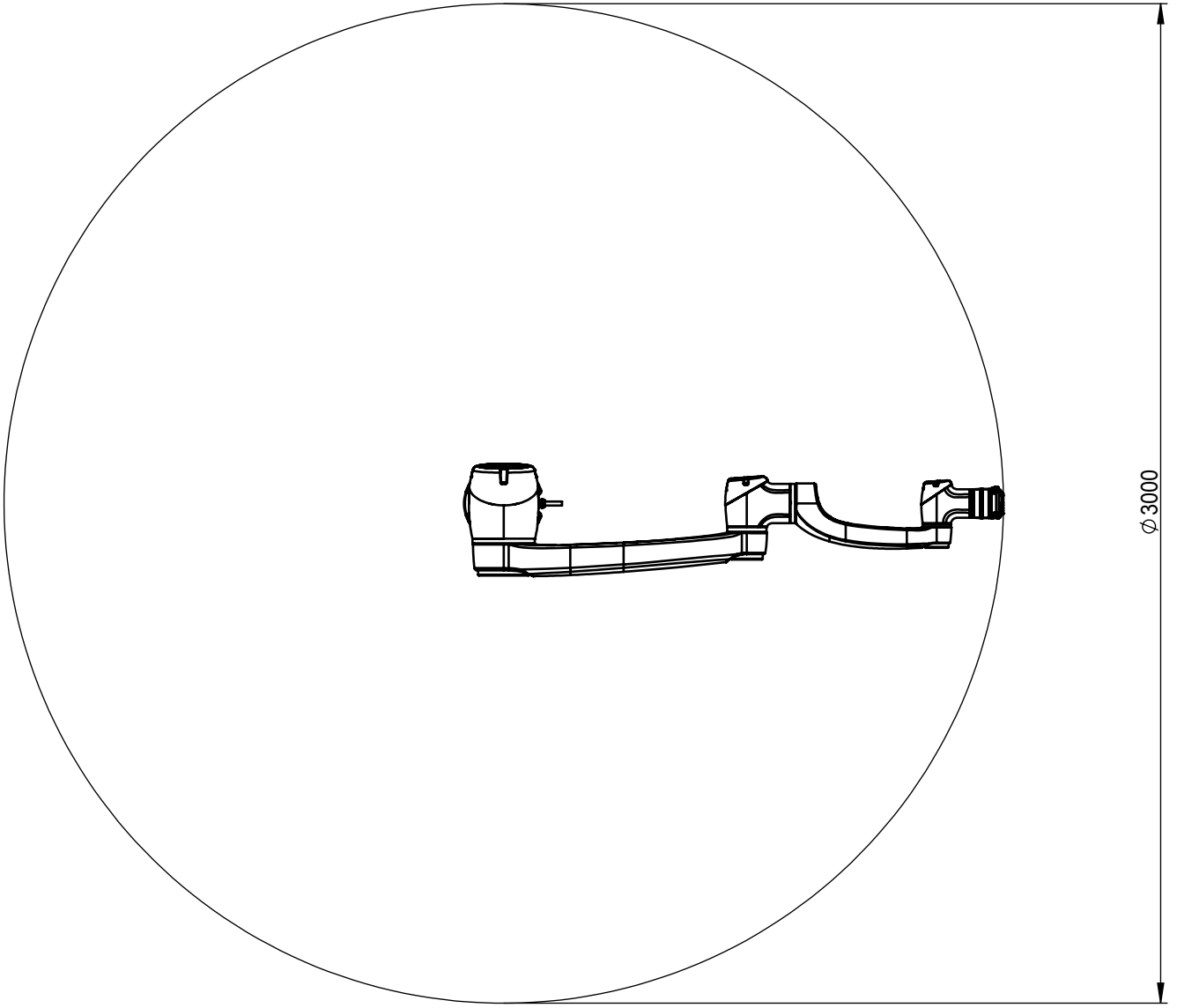

MyCo-15-1.30