Kingspan
Installation Guide

Assembly Instructions for Insulated Roof & Wall Panels Systems

POWERED BY QuadCore™ TECHNOLOGY

Kingspan®

1. Introduction 4

2. Transportation, Manipulation, Storage 5

3. Panel fastening 7

4. Assembly Instructions for Panels 8

4.1 Technical Preparation, climate conditions upon assembly, making cutbacks 8
4.2 Mounting the Roof Panel KS1000 RW 9
4.3 Mounting the Roof Panel KS1000 X-DEK (options XD, XM, XB, XG) 13
4.4 Mounting the Roof Panel KS1000 FF 18
4.5 Mounting the Wall Panel NC, NF, TF, TL, RB and RF 21
4.6 Mounting the Roof Panel KS1000 AWP/ AWP Flex / AT 24
4.7 Mounting the Roof Panel KS1000 RH / FH 28
4.8 Mounting the Roof Panel KS1000 RW 33
4.9 General instructions for assembling and manipulation of panels 36

5. Assembly Instructions for Accessories 37

5.1 Pre-shaped Corner Panels 37
5.2 Rainwater drainage system 38
5.4 Aluminum products 42
5.5 Snow guards 43
5.6 Sealants, tapes and fillers 45
TF, TL, NF, NC, AWP,AT, RF, RH, FH
10.5 Scheme of the roof panels' cladding

6. Tools and Equipment 48

7. Regulations and Recommendations 49

7.1 Building site safety, building and assembly works 49
7.2 General Recommendations 50

8. Monitoring and Maintenance 51

10. Attachment 53

10.1 Storage and manipulation instructions for panels 53
10.2 Placement of cutbacks and determining the direction of assembly for panels RW, FF, HTL, PC 55
10.3 Placement of cutbacks and determining the direction of assembly for X-DEK panels 56
10.4 Placement of cutbacks and determining the direction of assembly for panels TF, TL, NF, NC, AWP, AWP Flex, AT, RF, RB, RH, FH 57
10.5 Scheme of the roof panels' cladding 58

INTRODUCTION

Welcome to the Installation Guide. This handbook is based on other booklets, in particular the big catalogue Design & Construction, which is also known as the Kingspan Systems' Guide. This handbook will guide you through the whole Kingspan system's installation process. It will introduce you to the basic principles and techniques including storage, manipulation with the panels, assembly of individual cladding elements and maintenance and minor repairs of the panels. In this guide, you can also find references to recommended assembly tools and panel manipulation utilities. The procedures of assembly of the panels are divided into independent chapters according to the type and use of the panel. This handbook will provide you with instructions for the assembly of various accessories (channel systems, corner panels, illumination units, etc.) and other suitable supplements that often help solve very complex issues, particularly those concerning roof sheeting and the process of penetrating the covering. In the Technology Handbook there are many references to other materials issued by the Kingspan Company. Therefore, you are advised to request other documents, especially the big catalogue Design & Construction that is also available on our websites.

Engineering Department

In more than 40 years we have gained significant expertise and extensive experience with the cladding design and its implementation for various buildings and are thus ready to provide you with the best possible solutions, based on proven construction components combined with an economic building process. We offer complex technical counseling services for investors, architects, designers, businessmen and providers of building or assembly services, where instructions will be given about choices for the best fitting materials, construction schemes, range of delivery specification and the ultimate assembly work.

Quality

Kingspan insulated sandwich panels are made of topgrade quality materials while utilizing the most up-to-date manufacturing facilities. The panels comply with the strict quality control standards according to the valid regulations and their long-time reliability and durability are thus assured.

Quality management system of the Kingspan corporation is certified in accordance with EN ISO 9001, 14001 and 18001.

Guarantees

Guarantees provided by the Kingspan Company are specified individually for each project.

Website

This handbook is also available on our website, section literature.

Special Training

The Kingspan Company organizes regular trainings for its customers. These are mainly aimed at firms and designers.

After participating in such an elementary training, a firm is given a certificate as a document validating the competency of this firm to carry out the cladding for the organization.

In this training you will be particularly informed about:

- the manufacturing program of the Kingspan Company
- the basic thermo-physical and technological properties of the panels
- the carrying-capacity calculations
- the fire endurance of the panels
- the procedure of specifying and ordering panels and accessories
- the basic instructions for manipulation, storage, and transportation
- the drafting and design of the cladding details
- the assembly of the cladding
- and many other practical suggestions and recommendations concerning the Kingspan panels

If interested, please contact our Technical Department where you will be informed about the next available term and the extent of the training.

Service Contact:

Technical Department

PL & Baltics	+48 48 378 31 50
UA	+38 067 467 13 01
FI	+358 400 480 257
SE	+46 31 760 26 99
NO	+47 69 14 44 00
DK	+45 7021 7788

Transportation

Panels are shipped in packs whose size and packaging have been particularly adapted for an easy automobile transportation as well as forklift and crane manipulation.

Proportions of a Pack

- max. Width: 1,100 mm
- max. Height: 1,230 mm
- max. Weight: 5,000 kg
- for panels' length see table 1

Lengths longer than recommended put additional demands on storage, manipulation and assembly!
During transportation, panels must be secured from damaging. In case that damage is found following standard regulations of the purchase contract and general terms of delivery is advised.

Panel	Common panel length		Panel length after counseling the manufacturer
	From	To	
	[mm]		
RW	2000	13600	20500
XD	2500	13500	15000
FF	2000	10000	14200
HTL	1800	6500	6500
PC	1000	8000	8000
RT	2100	10525	13475
TF/TL/NF/NC	2000	13600	18000
AWP / AWP FLex	2000	13600	18000
RF / RB	2000	10000	14200
HF	2000	10000	14200
FA	2000	6000	

Tab.1.: Manufacture possibilities of panel lengths

Stacking and Manipulation (Fig. 1 and 2)

Recipient is obligated to ensure a proper unloading of the delivery. Unloading is assisted by the shipper who also supervises the manipulation with the panels. He/she will then make a note about the unloading process in the delivery record which will then be signed by the recipient.
In order to ensure a safe unloading of the panel packs it is vital that the appropriate mechanisms be used:

- a forklift or a crane with the appropriate load capacity for packs with a maximum length of 6 m.
- a (side) forklift (minimum of 4 props) or a crane with a balance beam bar for panels longer than 6 m.

Fig. 1.: Manipulation with the panel packs

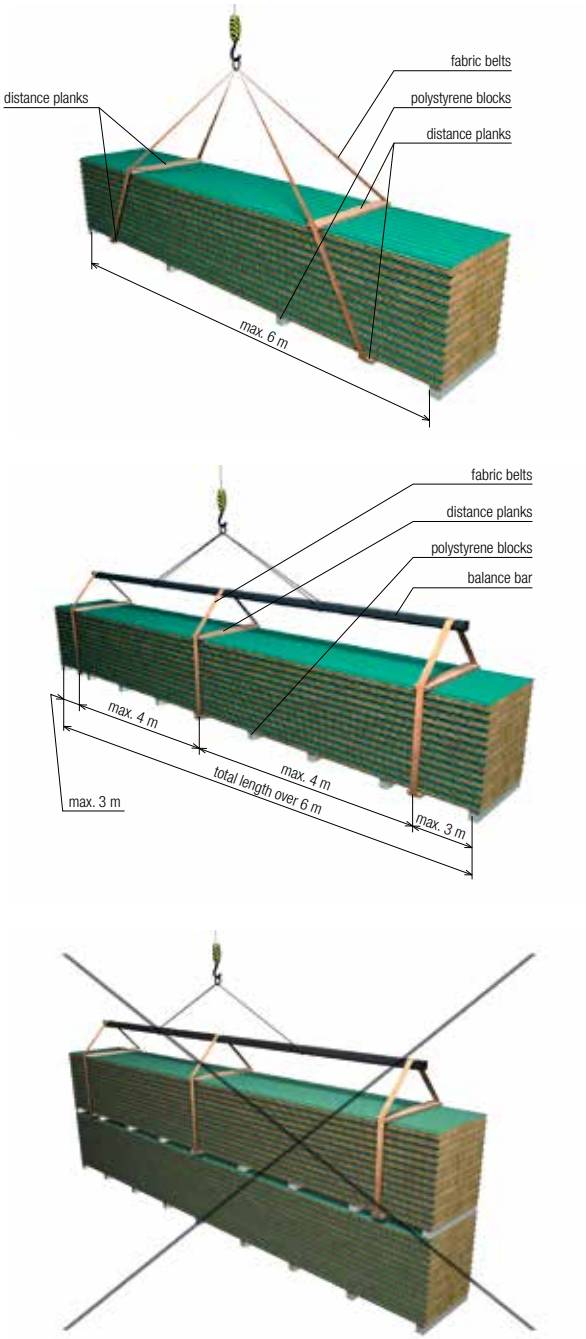

We recommend using fabric belts suspension. Do not, under any circumstances, use steel ropes or chains!

In order to prevent the panel locks from deformation, we place spread footing (overlapping a panel's width by at least 5 cm) under the belt hangings. At the same time a crossbar must be used for the top.

The number of bonds in a pack longer than 6 m is defined so as there the interval between the bonds and is not longer than 4 m and the loose end is not longer than 3 m.

When manipulating the panel packs, storage and manipulation guidelines (see Attachment No. 1) that have been attached to every single pack must be followed.

The packs are not to be disassembled earlier than at the installation site. For roof panel packs this usually means the roof (if the roof construction's weight capacity allows for this), facade panels are usually unpacked at the nearest possible place to the installation site.

When drawing panels from a stack, it is necessary that the panel be grasped at the bottom where the locks are, and not only at the top metal plate.

Disrespecting this might lead to the metal plate getting separated from the core.

Once a pack has been opened, panels must only be dealt with one at a time (do not move, for instance, two panels one on another).

When manipulating mineral-wool-filled insulated panels longer than 7 m, assembly accessories must be used, that ensure the panel's stability is retained. Otherwise the panel's integrity might be compromised during manipulation (metal plate gets separated from the core or the panel gets broken). One possible technical implementation can be seen in Fig. 31.

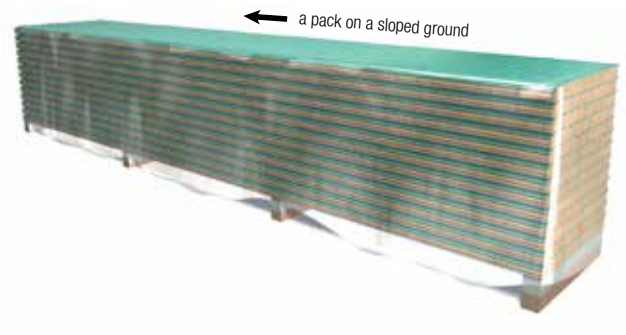

Fig. 2.: During storage panels must lie on a slightly sloped ground and be covered in a waterproof canvas so that a better water drainage is provided.

Storage

During storage, water accumulation in between the panels, excessive stress on the panels, direct sunlight, rain and dust must be prevented.

Therefore we suggest that the panels be stored:

- on a padding (polystyrene blocks, wooden footing) that is a part of the pack, placed on a ground with a small steep gradient, headed along the ground inclination.
- a single layer only, if stored for longer periods of time!
- with a sheet on the top and a sufficient air venting provided at the same time.

Panels are fitted with a special bonding agent at the corners and thus prevented from sliding while being transported. This substance can be easily removed during assembly.

During storage of the panel packs, storage and manipulation guidelines (see Attachment No. 1) that have been attached to every single pack must be followed.

Interior side of the panel KS1000 TF is marked black in the channel of the lengthwise side lock. Panel KS1000 FR has a sealing strip applied to the lock of its exterior side.

The protection plastic film serves as a temporary damage protection during shipping and manipulation. Remove the film within four weeks after assembly and within ten weeks after the product has been delivered.

The protection plastic is normally applied on the exterior side of panels. When in doubt, as to which side is exterior and which interior, contact our company's customer department or your sales representative.

PANEL FASTENING

Panels are generally mounted onto a bearing construction by self-drilling or thread-cutting screws.

Should a customer wish so, special-head screws may be used so as to prevent unauthorized tampering.

The number of anchoring screws required will be assessed for every individual case by a structural designer according to carried reaction, which is determined by position and load of the panel where maximum design carrying capacity of a screw joint is specified for a particular case (type of the panel, thickness of the panel's metal plate under the screw's head, type and position of the screw and the washer, thickness of the bearing construction).

For more information, see the Design & Construction Guide or contact the Kingspan Technical Department.

For panel installation can be only used fasteners specified in the technical certificate screw manufacturer. The technical certificate specifies exclusively anchoring of sandwich panels with steel surface coatings sheets.

When installing the screws, a depth stop must be used.

When fixing the sandwich panel the screws sealing washers should undergo a slight deformation (see picture). At the same time, when tightened properly, it will become mild pressing the surface of the sandwich panel. Slight depressions in the anchor points area are generally the characteristics of the cladding system of sandwich panels and are inevitable. For panels with IPN/QuadCore insulation these recesses (at the point of the screws) should be less than 2 mm.

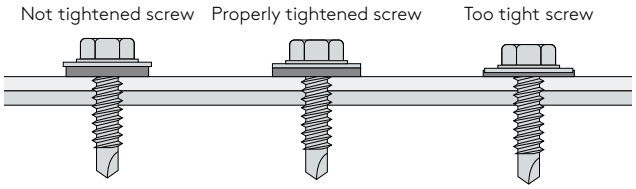

Slight visible depressions in the outer sheet may also be due to deformation of the panel caused by temperature. This is also the property of the sandwich panel cladding system and these recesses are inevitable. In case of frequent occurrence of recesses deeper than 2 mm, the panel functions should be verified. This information corresponds to the current technological possibilities and the current state of knowledge, and is generally not questioned.

Recommendation: It is recommended to use sealing washers of larger diameter to reduce the tendency to recessing (instead of ∅ 16 mm use washers with ∅ 19 mm or ∅ 22 mm).
The formation of the recesses may be also limited by the use of screws with washers.

Fastening Components

Fig. 3.1

thread-cutting screw (P02) for mounting panels to a wooden or thin-wall profile bearing construction

Fig. 3.2

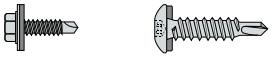

self-drilling screw (P03) for roof panels' attachment

Fig. 3.3

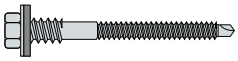

self-drilling screw with a thread under the head (P02) for mounting a panel o a bearing construction, especially a roof panel under a ridge

Fig. 3.4

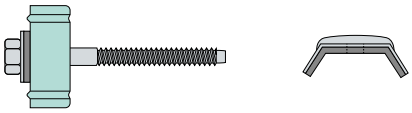

self-drilling screw with a calotte (P01) for mounting roof panels on a ridge to the bearing construction

Fig. 3.5

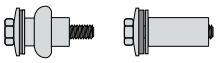

metal grip fastener (P27) for illumination panels' attachment

Fig. 3.6

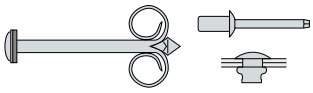

single-side opening rivet TPR (P32) with a sealing washer for attaching profiles to panels and single-side closed rivet for attachment fixation and fastening of plumbing components

Fig. 3.7

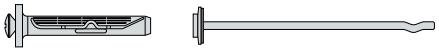

rivet with a pre-mounted spike (P31) used as a fastener for plumbing components and nailing spike to concrete with sealing washer (P39)

Fig. 3.8

screw for concrete

Fig. 3.9

self-drilling screw with drilling washer (P37), which forms the path itself in the insulating core. Used to fasten X-DEK panels.

Fig. 3.10

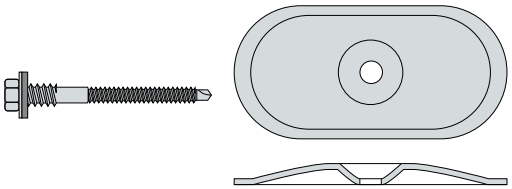

self-drilling screw with plate washer (P38) for panel anchoring under the waterproofing foil (the washer protects the film from tearing in screw head place)

TECHNICAL PREPARATION

Before starting the assembly of Kingspan panels, it is necessary to assure that quality technical preparations have been made.

Among others, this encompasses providing thorough documentation of the project which must include:

- panel distribution lay-out plans
- a means of mounting the panels (type and number of fastening screws) onto individual bearing constructions
- solutions of assembly details
- specifications of panels, plumbing components, and gluing and sealing materials to be used
- technological schedule of the assembly (done by an assembly organization)

After counseling, Kingspan is able to provide Technical Preparations of the first four above-mentioned requirements.

Upon assuming a building site, it is vital that the investor provide the Protocol on steel construction in accordance with EN 732611.

- Checking the make of the bearing construction on the part of accordance with the project, accuracy of the assembly (flatness, perpendicularity, parallelism) and the superficial modifications on the steel skeleton. Possible inconsistencies that might require additional ordering of panels should be communicated to Kingspan immediately.
- Kingspan recommends keeping the bearing construction's flatness at (min.) L / 600 for cladding with foam panels and L / 1000 for cladding with mineral fiber insulated panels. L is the distance between two adjacent struts.

The influence of climate and weather conditions upon assembly

The assembly of sandwich panels is not demanding as far as weather conditions are concerned (temperature, rain, etc.).

When building in extreme temperatures, however, thermal expansion as well as difficulties of using some sealing and cementing materials must be taken into account.

For performing the assembly work (laying the panels) we recommend a temperature range from approximately –10°C to +40°C.

Given a considerable surface of the panels, a strong wind poses a significant danger during the assembly.

When working in heights above 20 m a means of measuring the speed of the wind must be available. Should the wind's speed rise above 8 m / s all works on hanging constructions and works requiring the use personal safety harnesses must be interrupted. Should the wind's speed rise above 10.7 m/s all works are forbidden. In respect of the wind, panels must be thoroughly fastened with all screws before the end of the shift. Only panels bundled in a stack are allowed to remain unfastened. Given the small weight of the illumination panels, packs of these must be additionally secured or taken off the roof.

Making cutbacks

Cutbacks in roof and wall panels RW, X-DEK, RT, FF, AW, TF, TL, NC can be divided as following:

- separated or uncut , with an inserted separation plastic film only – CUT BACK 0
- not separated – CUT BACK 1
- separated, with isolation left – CUT BACK 2
- separated, with isolation removed – CUT BACK 3

CUT BACKS	Manufactured panels	Minimum panel length [mm]	Length of cut [mm]
CUT BACK 0	FF (approx. the first 50m production batch is free of separation)		0–250
CUT BACK 1	TF, TL, NC, AWP	2700	50–250
CUT BACK 3	RW, RT, X-DEK	2000 for panels RW 2500 for panels X-DEK 2100 for panels RT	20–300 for panels RW* 50–630 for panels X-DEK* 150 R-right for panels RT*

* For these types of roof panels, for technological reasons it is not possible to produce panel without cut back. You have to consider the cut back when designing the building and during installation. At the same time, it is necessary to specify the direction and location of cut back (left or right).

Tab. 4.1.1

ROOF PANEL KS1000 RW

Preparing the assembly

- The assembly is usually carried out after the wall panels have been mounted. The panels should be oriented against the direction of the prevailing wind.
- The panels are suitable for the minimum roof pitch of 7% (4°) if they are applied as whole from the crest to the eaves. If the panels need to be joined transversely, the minimum recommended pitch is 10% (6°).
- Before mounting a starting roof panel a support platform needs to be erected. If the permitted load of the frame allows for this, the panel packs are to be delivered directly to the roof, using a crane of an appropriate carrying capacity. The individual panels are to be transported to the exact place of assembly either by a crane or manually, with regard to their weight. Before fastening a panel, the bearing construction and lower parts of the flashing must be covered with PE adhesive sealing tape as instructed in the implementation documentation.
- Roof panels KS1000 RW (three-wave trapezoidal panels on the exterior side and mildly shaped metal sheets on the interior side) are suitable, if dry and at a low slant, to be walked on, once they have been fastened with screws to the bearing construction.
- Nonetheless, the use of walking boards is strongly advised! **For a steeply pitched roof that is wet, covered in snow, or frosted, the danger of slipping is especially imminent and the roof cladding in this case is not to be walked on!** Where there it is not possible to avail of lengths corresponding to the roof dimensions, the panels are mounted in rows from eaves to crest (see Attachment 5) in the direction of assembly that is prescribed in the detailed implementation documentation (against the direction of the prevailing wind).

- It is necessary to operate in clean shoes during assembly and make use of walking boards, if present. Once assembled, the panels can be walked on, used as walkways for maintenance, safety inspections (of the cladding or technical devices on the roof). Nevertheless, the panels are not to be used in this manner for regular walking, unless provided with specialized walking accessories such as walking stripes or benches for this kind of use could lead to damaging of the panels' coating or to diminishing of the panels' locks' tightness. Panels can be under load for long time periods only if pertinent statistic calculations have been performed.
- If there is no sealing tape applied in the end corrugation of a panel, or this tape has been damaged in any way, it is necessary to assure that spare tape has been applied before assembly begins. If this is specifically called for in the implementation documentation, the present sealing tape may be replaced with ∅ 4 mm butyl sealing tape (applied on site) (P29). The required sealing tape is a part of the panel delivery (see Fig. 10).

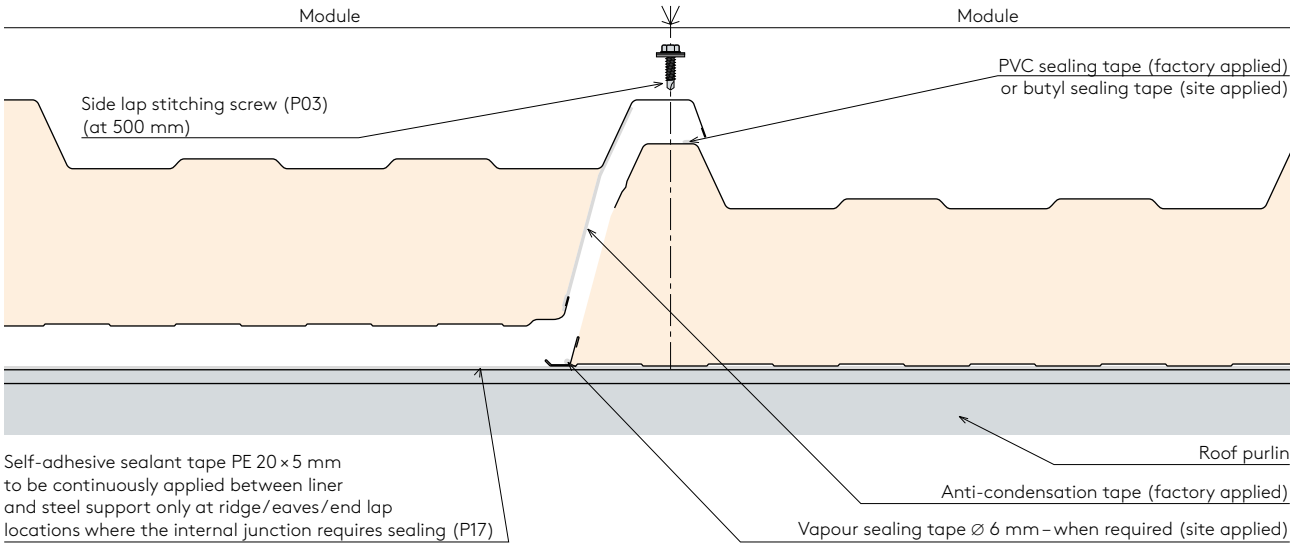

Fig. 10. – Detail D10.1. – Longitudinal Joint of an RW Panel

- In case of increased fire resistance need according to the project documentation, the the Promaseal XT sealing tape can be installed in a longitudinal joint.
  If the interior humidity is above the normal level, or if this is specifically called for in the implementation documentation, we recommend applying vapor-proof tape (∅ 6 mm) or caulking on the lengthwise channel from the interior side of the panel. To meet this requirement, it is also necessary to add vapor-proof caulking or sealants on other joints of the roof's surface as well.

Assembly and fixation of panels

- Before mounting the panel, make sure that the panel is placed precisely (we recommend drawing control marks on the steel construction) and that the lengthwise joint is properly "seated" so that tightness of the connection is ascertained. During assembly it will suffice to have fastened the panel with only two screws, but by the end of the shift all laid panels must be fastened with all required screws and the panels that have not been mounted yet must be tied in a pack!
- Before the final fastening of panels to a steel construction the longitudinal joints of panels (locks) are fastened with self-drilling (thread-cutting) ∅ 4.8 mm or ∅ 5.5 mm screws (P03) on a corrugation, spaced apart by 500 mm at most (see Fig. 10).
- For fastening onto the bearing construction (purlins), self-drilling or thread-cutting stainless screws with a sealing washer and a calotte (P01) or a thread under the head (P02 or P04) are normally used.
  The type and count of the screws is determined by a structural designer or the project documentation. Recommended types of screws and their positioning are depicted in the Kingspan Design & Construction Guide.
- Types of fastening components for different kinds of constructions (e.g.: cold/hot -rolled profiles, blockhouse construction, wooden construction) are listed in the Kingspan Design & Construction Guide.
- As an example we present an outline on mounting panels onto thick-wall profiles, using thread-cutting screws (P01):
- After precise embedding of the panel, a hole for a screw is drilled into the panel and the bearing construction. The diameter of the hole is to be determined according to the bearing constructions' profile thickness and the information provided by the screw manufacturer.
- The panel is fastened tight by using a tightening tool. It is necessary that the screw is appropriately tightened (see Fig. 65) so that the sealing washer can perform its function.
- Before the ultimate tightening of screws, it is necessary that a local removal of protection plastic film is performed. A complete removal is to be performed after the assembly has been finished, within 4 weeks after its completion.

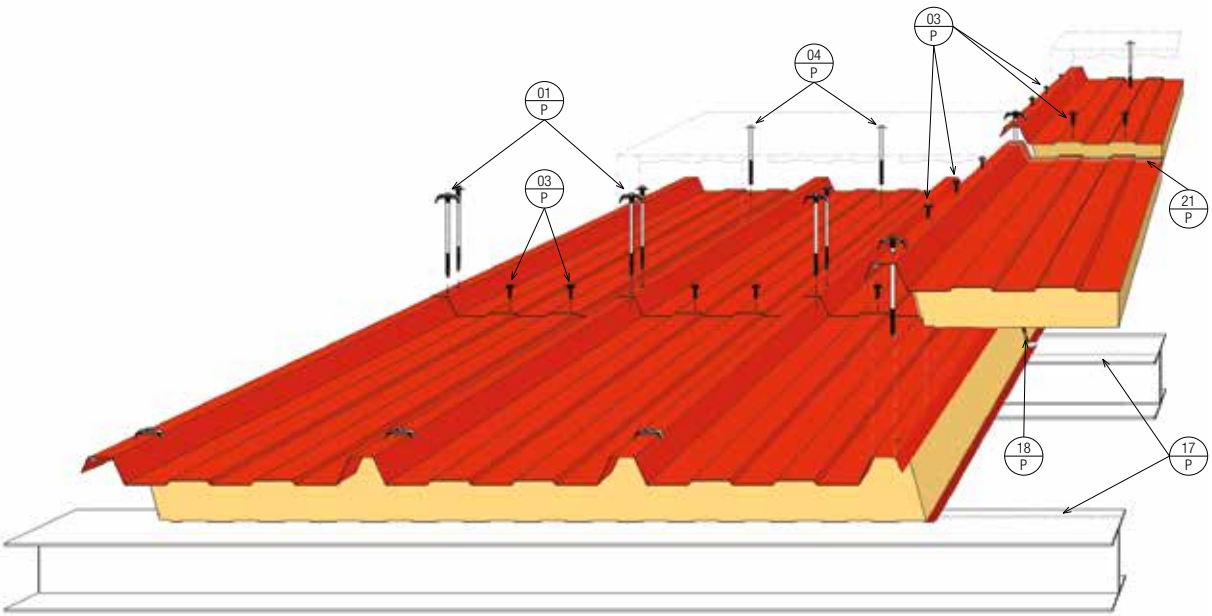

Fig. 4.2.2: Screw and accessories location

Solution to end lap

- If the distance from eaves to ridge is filled with two or more panels (panel rows), it is necessary to create quality longitudinal joints in between these panels (see Fig. 11).
- The individual rows of roof panels overlap by the length of the panel's cutback. If these cutbacks are required by the implementation documentation, it is possible to fabricate them during manufacture in accordance to their given types and lengths. The type of a cutback is defined by how the insulation is separated and by orientation (left "L" and right "R" cutback) (see Attachment 2).
- The minimum cutback length is determined by the roof pitch:
  - ≤ 10 % (5.71°) - 250 mm
  - > 10 % (5.71°) - 200 mm
- For creating a quality longitudinal panel joint, we recommend the following procedure:
  - Remove the remaining thermal insulation from the top trapezoidal metal sheet of the panel.
  - The overlapping surface needs to be rid of the protective plastic film and the contingent burrs, regardless whether they were formed upon cutting or manufacture.
  - If this is specifically called for in the implementation documentation, use two pieces of the self-adhesive expansion sealing tape PU 20 × 4 (20) mm P(18) to fill the occasional gap in the longitudinal joint between panels before the placing of the top panel.
  - Before mounting the top panels apply 2 strips of butyl self-adhesive sealing tape 10 × 3 mm (P21) onto the bottom row of panels. Always choose the positioning of this tape on both ends of this overlap.
  - For low-pitched roofs (up to approximately 6°) the longitudinal joint is fastened at the groove between panels with self-drilling screws (6 per panel) whose positioning and count is stated in the Kingspan Design & Construction Guide.

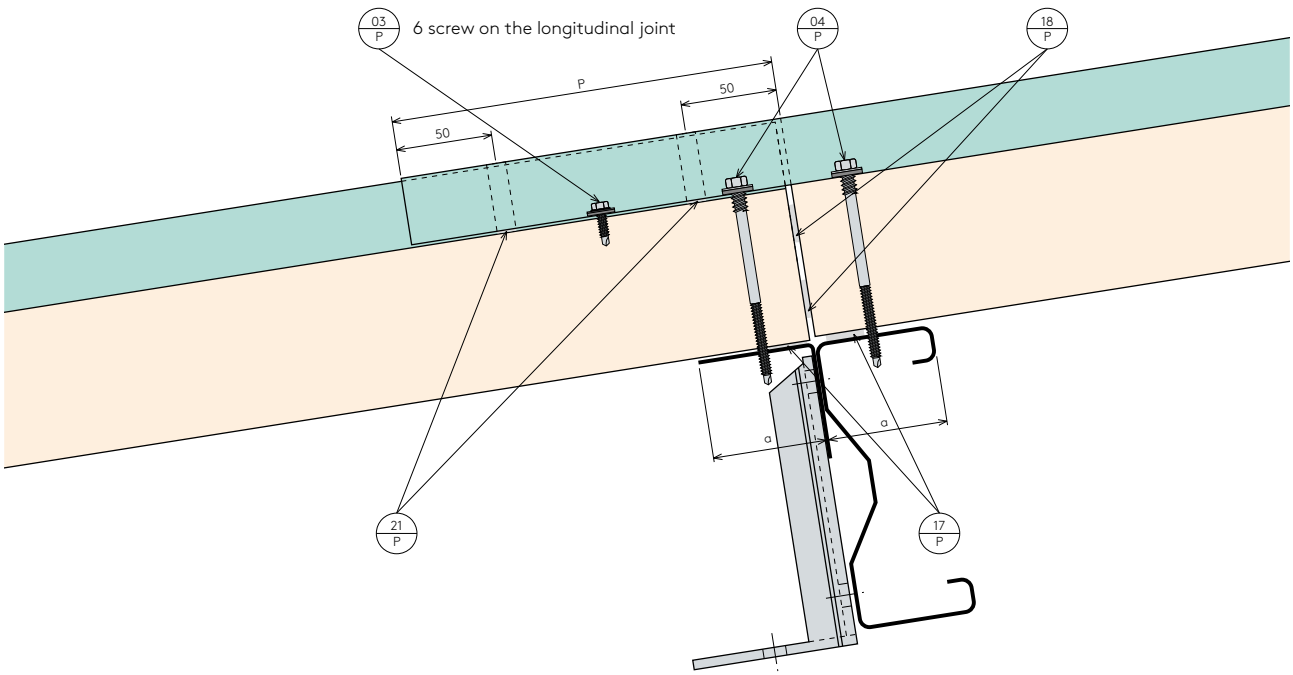

Note:

P Length as a function of the roof pitch:
– P = 200 mm for a roof pitch > 10 % (cutback made during fabrication)
– P = 250 mm for a roof pitch 10% (cutback made during fabrication)
Kingspan only manufactures cutbacks (overlaps) shorter or equal to 250 mm.

a according to structural/static requirements

Fig. 4.2.3: RW panel cross-section

Important notices

- If a panel is damaged during assembly, mark the affected area with a felt-tipped pen immediately and see to it that a timely and proper repair is effected. After the assembly has finished, remove all waste material and rough dirt.
- When assembling these panels, follow the details outlined in the implementation documentation or the suggestions presented in the Kingspan Design & Construction Guide.
- Given the possibility of violating the statics of a panel (delaminating, rupture), it is forbidden, especially for long panels, to be hoisted or otherwise manipulated with the flat side down without being additionally supported along the length of the panel. We recommend manipulating the panel in a "standing position" (rotated around the lengthwise axis by 90 °).
- It is necessary to be aware of the danger of a panel lock's deformation or partial separation (delaminating) of the exterior sheathing from the thermal insulation. Therefore it is forbidden to hoist a panel in its lock at the metal plate only.
- Avoid the danger of scraping the surfacing by sliding the panels on unclean bottoms or by manipulation with unsuitable binding or assembly accessories (See Attachment 1).
- Accessories for KS1000 RW roof panels are also available. Detailed assembly instructions for rooflights KS1000 RW / HTL, KS1000 PC can be found on our websites or you can obtain them on request from the Technical Department.

KS1000 RW/HTL Hybrid Rooflight

Fig. 12 Manipulating a Roof Panel with an Assembly Tool ("Beam Tie" – for holding at a firm rib)

ROOF PANEL KS1000 X-DEK

Preparing the assembly

- The assembly is usually carried out after the wall panels have been mounted.
- The panels are suitable for the minimum roof pitch of 1% (0.5°).
- The X-DEK panel is manufactured in four different options of external layer:
- **XD** - metal sheet + applied waterproofing (PVC foil glued or mechanically fixed)

- **XM** – integrated PVC waterproofing membrane factory applied

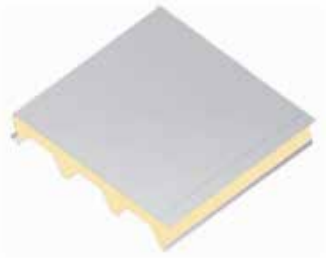

- **XB** – integrated bitumen-impregnated mat TR20 + on site applied waterproofing

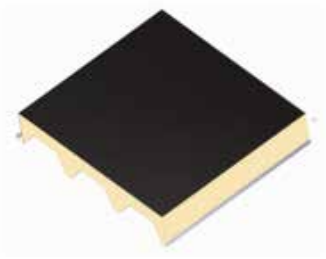

- **XG** – integrated fiberglass mat TR27 + on site applied waterproofing (PVC foil bonded or mechanically anchored to the panels)

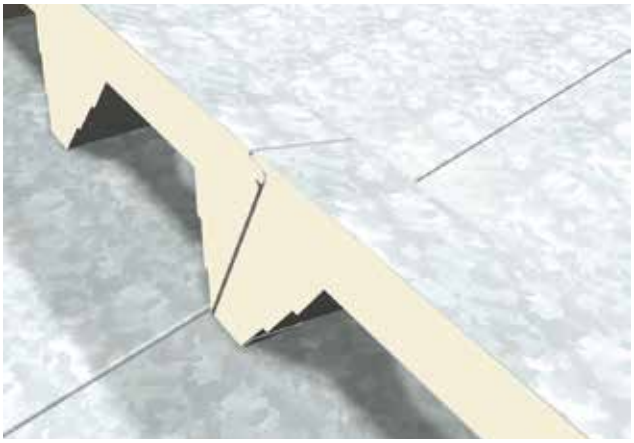

- Before mounting a starting roof panel a support platform needs to be erected. If the permitted load of the frame allows for this, the panel packs are to be delivered directly to the roof, using a crane of an appropriate carrying capacity. The individual panels are to be transported to the exact place of assembly either by a crane or manually, with regard to their weight.
- Before fastening a panel, the bearing construction and lower parts of the flashing must be covered with PE self-adhesive sealing tape.
- Roof panels KS1000 X-DEK are suitable, if dry and at a low slant, to be walked on, once they have been fastened with screws to the bearing construction.
- **Nonetheless, the use of walking boards is strongly advised! For a steeply pitched roof that is wet, covered in snow, or frosted, the danger of slipping is especially imminent and the roof cladding in this case is not to be walked on! It is necessary to operate in clean shoes during assembly and make use of walking boards, if present, so as to prevent the PVC plastic film from damage (scratches, cuts, grits in the shoe soles)!** Once assembled, the panels can be walked on, used as walkways for maintenance, safety inspections (of the cladding or technical devices on the roof). Nevertheless, the panels are not to be used in this manner for regular walking, unless provided with specialized walking accessories such as walking stripes or benches for this kind of use could lead to damaging of the panels' PVC layer or to diminishing of the panels' joints' tightness. Panels can be under load for longtime periods only if pertinent statistic calculations have been performed.

Panels handling

- When handling the panels, follow the recommended procedure (refer to the instructions on page 53) or use rotatable vacuum jack RotaBoy (Fig. 4.3.1).
- RotaBoy is a vacuum handling device with the possibility of turning panel (arm) around its sub-axis by 180° (Fig. 4.3.3). The device is compact for easy transport.
  It is released from the frame and folded before use according to the required panel length (Fig. 4.3.2).
  An accessory package includes a pedestal and supports.
  Precise instructions for working with the device will be familiarized with the transfer of equipment.
- For more information, rent or purchase RotaBoy equipment, contact Kingspan Sales Department.

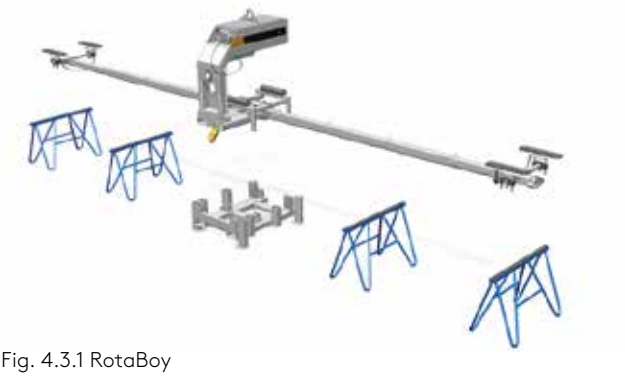

Fig. 4.3.1 RotaBoy

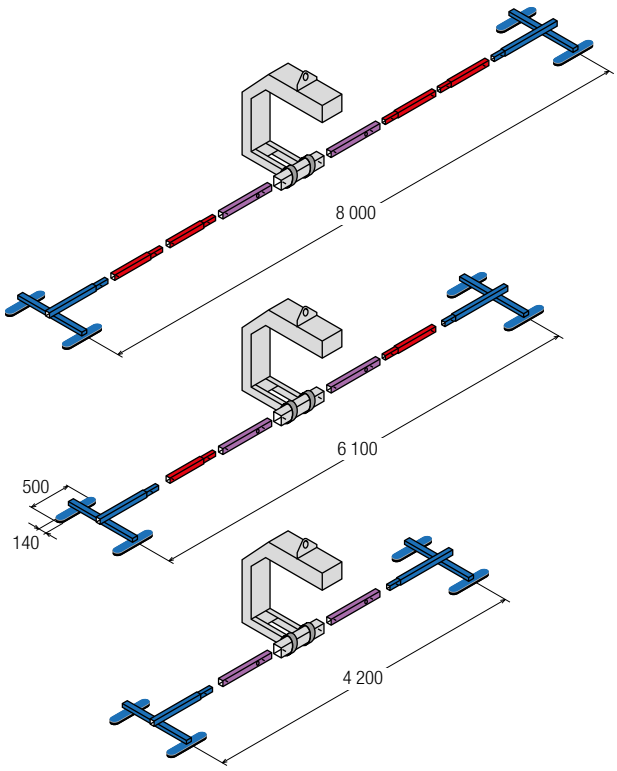

Fig. 4.3.2 Device length options

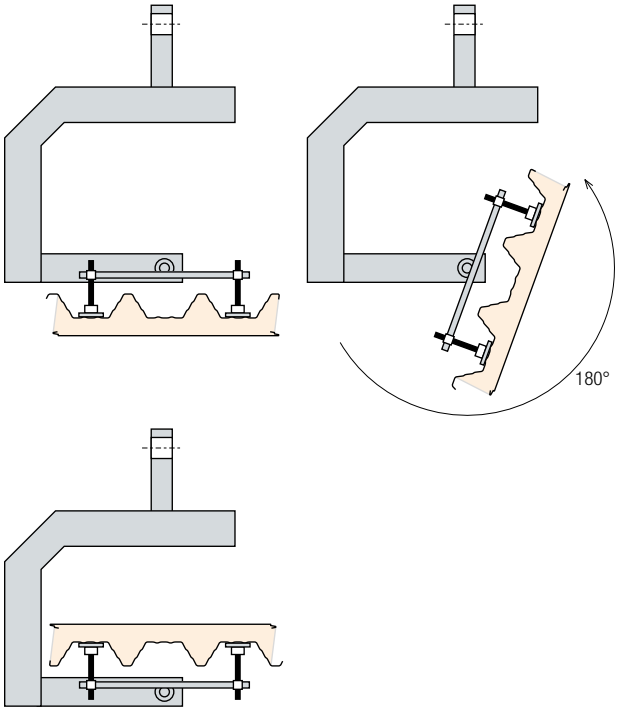

Fig. 4.3.3 Rotation of panels around the longitudinal axis

Assembly and fixation of panels

- Before mounting the panel, make sure that the panel is placed precisely (we recommend drawing control marks on the steel construction) and that the lengthwise joint is properly "seated" so that tightness of the connection is ascertained. During assembly it will suffice to have fastened the panel with only two screws, but by the end of the shift all laid panels must be fastened with all required screws and the panels that have not been mounted yet must be tied in a pack!
- After the final fastening of panels to a steel construction the longitudinal joints of panels (locks) are fastened with self-drilling (thread-cutting) ∅ 4.8 mm or ∅ 5.5 mm screws (P03) on a corrugation:
  - no requirement for additional fire resistance - max. at 1000 mm
  - with require for additional fire resistance - max. at 500 mm
- To fix the panels to the support structure use self-drilling or self-tapping screws. Type and number of screws should be design according project documentation in consultation with the panel manufacturer.
- Recommended screw types and their location can be found in Kingspan Design & Construction Guide or in our Technical Department.

Panel fixing options:

- fastening in the bottom steel sheet of the panel - this method of fastening is possible with all four X-DEK panel options (XD, XM, XB, XG).

1. self-drilling screw with drilling washer for steel structure thickness 0-4 mm and 4-12 mm (P37) - fastening according to a) procedure below
2. self-drilling screw with sealing washer (P04) for steel and wood structure - fastening according to b)procedure below
3. self-tapping screw with sealing washer for steel, concrete and wood structure (P04) - fastening according to c) procedure below

- fastening through the whole panel - this method of fastening is possible only on X-DEK XD panel with sheet metal outside

4. long self-drilling screw with steel plate washer for steel and wood structures (P38) - fastening according to procedure d) below
5. long self-tapping screw with steel plate washer for hard base for steel, concrete and wood structures (P38) - fastening according to procedure e) below

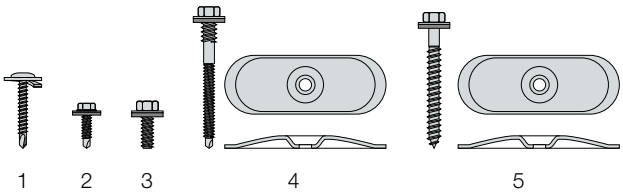

Fig. 4.3.4 Fasteners types

Fastening procedures for individual fixing options:

X-DEK XM, XB, XG panel (detail 4.3.6)

a) fastening with self drilling screws with drilling washer (P37 - Fig. 4.3.4-1) into the steel structure:

- after mounting the panel, fasten it to the inner sheet using a special elongated self-drilling screw through the insulating core of the panel to the structure. Screw thanks to the drilling washer itself, forms a path through the insulating core. However, the assembly is demanding for accuracy.

b) fastening with self-tapping screws with sealing washer (P04 - Fig.. 4.3.4-2) into a steel structure or wood:

- after exact cladding of the panel, it is fastened by a special hole drilled in the insulating core of the panel to the inner sheet metal.
- using an electric wrench with an extension to fasten the panel with self-tapping screw.
- the hole formed after removal of the insulating core is filled back with mounting foam after the final fastening.

c) fastening with self-tapping screws with sealing washer (P04 - Fig. 4.3.4-3) into steel, concrete or wood structure:

- after exact cladding of the panel, hole is drilled through insulating core of the panel to the inner sheet metal.
- drill hole through the inner sheet for self-tapping screw.
- use an electric wrench with an extension to fasten the panel through the inner sheet to the structure.
- the hole formed after removal of the insulating core is filled back with mounting foam after the final fastening.

X-DEK XD panel (see Fig. 4.3.7 and 4.3.8)

a) fastening with self drilling screws with drilling washer (P37 - Fig. 4.3.4-1) into the steel structure:

- the fastening procedure is the same as for X-DEK XM, XB and XG described above only need to be drilled beforehand hole in the outer steel of the panel.

b) fastening with self-tapping screws with sealing washer (P04 - Fig. 4.3.4-2) into a steel structure or wood:

- the fastening procedure is the same as for X-DEK XM, XB and XG described above only need to be drilled beforehand hole in the outer steel of the panel.

c) fastening using self-tapping screws with sealing washer (P04 - Fig. 4.3.4-3) into steel, concrete or wood:

- the fastening procedure is the same as for X-DEK XM, XB and XG described above only need to be drilled beforehand hole in the outer steel of the panel.

d) fastening using long self-tapping screws with steel plate washer for hard structures - steel and wood (P38):

- after cladding the panel, fix it to the structure by electric wrench, self-drilling screw with a padded washer.

e) fixed with long self-tapping steel screws (P38) into the concrete structures:

- after the panel has been cladded accurately, the bore is drilled through the outer panel sheet, insulating core and inner sheet further down to concrete structure, in depth according to the screw manufacturer.
- use the electric screwdriver to fasten the panel with a screw with a plate washer.

When calculating the load-bearing capacity of the panels, width of support beam under panels must be taken into account.

Minimum support width for X-DEK XM, XB, XG

- for the gap between the supporting structure L <4m:
- when the panel is cladded as a single span, minimum support width is a_{min} = 50 mm
- when placing the panel as a continuous span minimum width of the extreme support is a_{min} = 90 mm and minimum width of intermediate support is b_{min} = 160 mm
- for the gap between the supporting structure L ≥ 4m:
- when the panel is cladded as a single span minimum support width is a_{min} = 40 mm
- when placing the panel as a continuous span the minimum width of extreme support is a_{min} = 40 mm and intermediate support width is b_{min} = 120 mm
- extreme support for joining two panels must be width 2 × a_{min} + 10 mm.

Minimum support width for the X-DEK XD panel with external steel sheet

- minimum width of the extreme supports is a_{min} = 40 mm and intermediate supports b_{min} = 100 mm.
- extreme support for joining two panels must be width 2 × a_{min} + 10 mm
- The panels can be mounted on the structure in two variants (Figure 4.3.5). In regards to the load transmission of panels, multispan application is more suitable. This is not the case for reinforced concrete purlins using X-DEK XD, where multi span cladding is not recommended.
  For better spread of load forces into the structure application mode "A" is recommended.

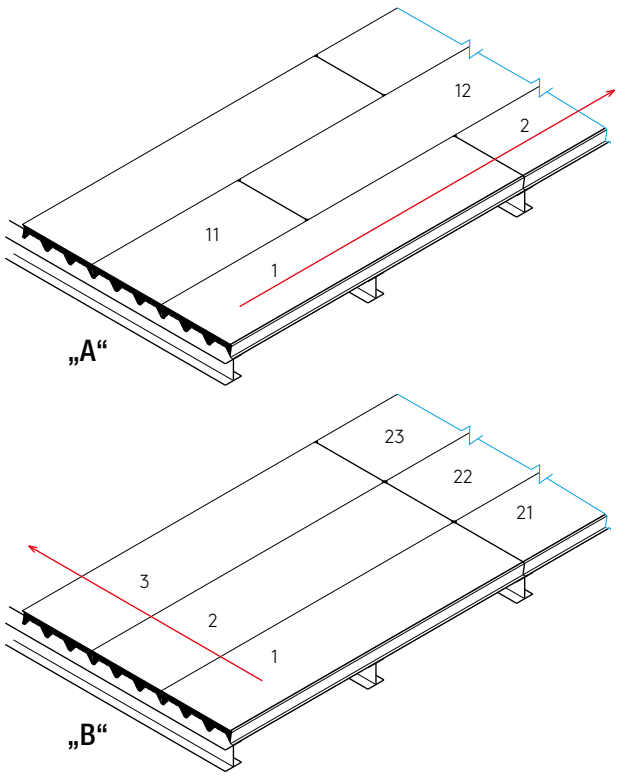

Fig. 4.3.5 method of panel application

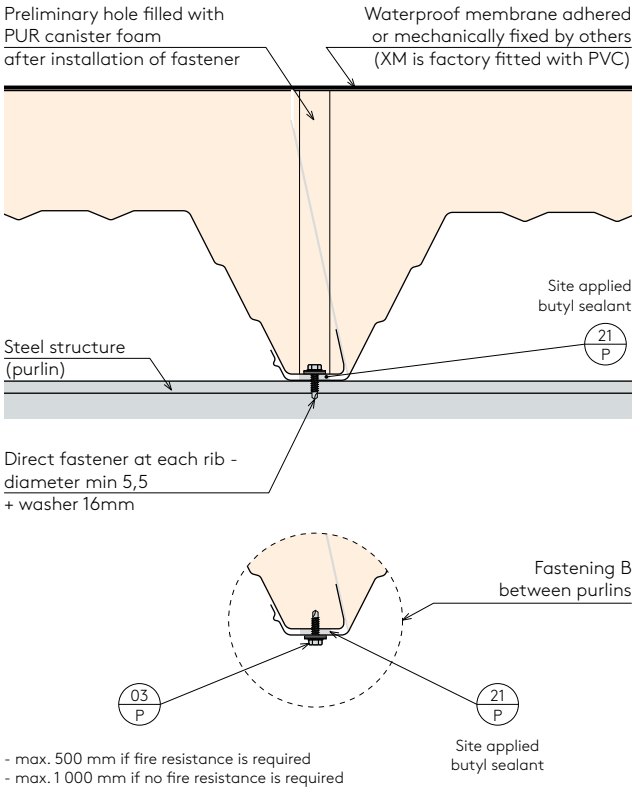

Fig. 4.3.6 X-DEK XM, XB, XG

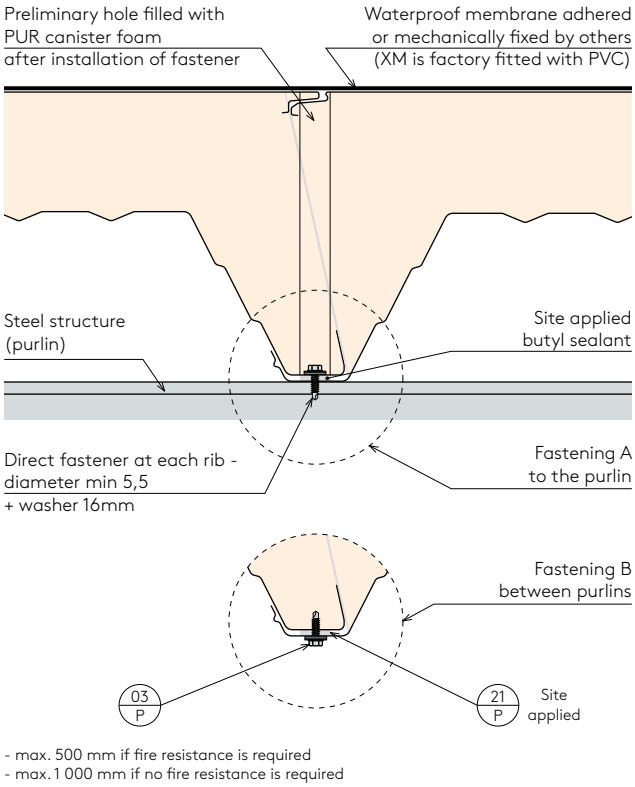

Fig. 4.3.7 panel X-DEK XD

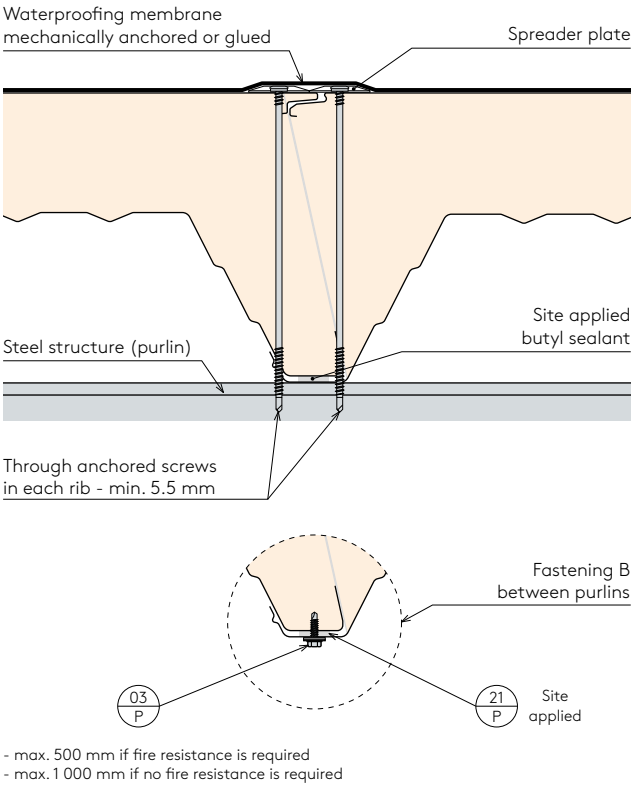

Fig. 4.3.8 panel X-DEK XD

- For X-DEK XM panels, when welding PVC membrane follow the technological instructions from the manufacturer or PVC film supplier.
- Proper mechanical fastening must be ensured when installing X-DEK panels, especially in locations with stress from wind suction.
- All professional work with waterproof PVC foil (sealing and insulating work) is carried out by a professional company authorized by the manufacturer of this PVC waterproof foil.
- In case of damage to the waterproof PVC foil during assembly, immediately mark the damaged area with a spike!

ROOF PANEL KS1000 FF

Preparation of the assembly

- The assembly is usually carried out after the wall panels have been mounted.
- The panels are suitable for the minimum roof pitch of 8.5 % (5 °) if they are applied as whole from the crest to the eaves. If the panels need to be joined transversely, the minimum recommended pitch is 14 % (8°).
- Before mounting a starting roof panel a support platform needs to be erected. If the permitted load of the frame allows for this, the panel packs are to be delivered directly to the roof, using a crane of a sufficient reach and carrying capacity. The individual panels are to be transported to the exact place of assembly either by a crane or manually, with regard to their weight. Before fastening a panel, the bearing construction and lower parts of the flashing must be covered with adhesive sealing tape as instructed in the implementation documentation.
- Roof panels KS1000 FF (with a trapezoidal 4-ribbed metal sheet on the exterior side and a slightly profiled metal plate on the interior side) are suitable, if dry and at a low slant, to be walked on, once they have been fastened with screws to the bearing construction.
- Nonetheless, the use of walking boards is strongly advised! **For a steeply pitched roof that is wet, covered in snow, or frosted, the danger of slipping is especially imminent and the roof cladding in this case is not to be walked on!** Where there it is not possible to avail of lengths corresponding to the roof dimensions the panels are mounted in rows from eaves to crest (see Attachment 5) in the direction of assembly that is prescribed in the detailed implementation documentation (against the direction of the prevailing wind).
- It is necessary to operate in clean shoes during assembly and make use of walking boards, if present.

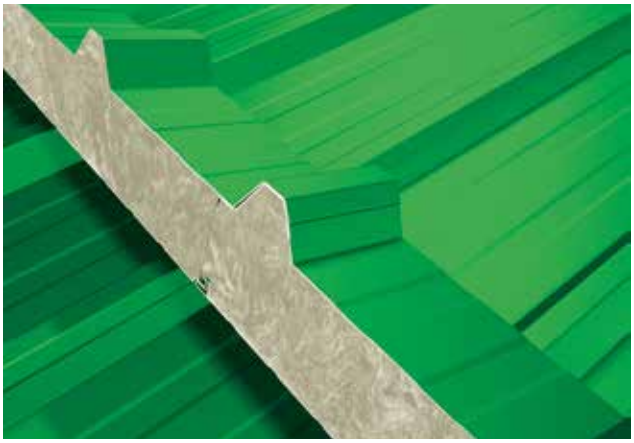

- Once assembled, the panels can be walked on, used as walkways for maintenance, safety inspections (of the cladding or technical devices on the roof). Nevertheless, the panels are not to be used in this manner for regular walking, unless provided with specialized walking accessories such as walking stripes or benches for this kind of use could lead to damaging of the panels' coating or to diminishing of the panels' locks' tightness. Panels can be under load for long-time periods only if pertinent statistic calculations have been performed.
- If there is no sealing tape applied in the end corrugation of a panel, or this tape has been damaged in any way, it is necessary to assure that spare tape has been applied before assembly begins. If this is specifically called for in the implementation documentation, the present sealing tape may be replaced with ∅ 4 mm butyl sealing tape (applied on site) (P29). The required sealing tape is a part of the panel delivery (see Fig. 29).

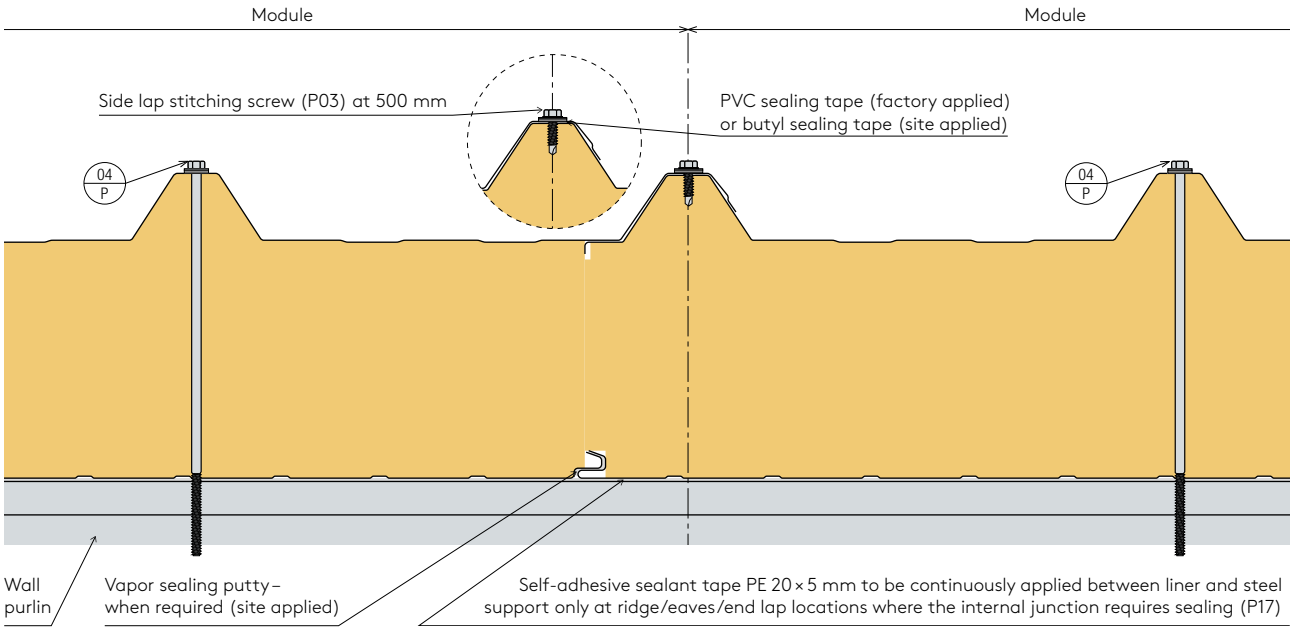

Fig. 29. – Detail D10.11. – Longitudinal Joint of an FF Panel

- If the interior humidity is above the normal level, or if this is specifically called for in the implementation documentation, we recommend applying vapor-proof tape (∅ 6 mm) or caulking on the lengthwise channel from the interior side of the panel. To meet this requirement, it is also necessary to add vapor-proof caulking or sealants on other joints of the roof's surface as well.

Assembly and fixation of panels

- Before mounting the panel, make sure that the panel is placed precisely (we recommend drawing control marks on the steel construction) and that the lengthwise joint is properly "seated" so that tightness of the connection is ascertained. During assembly it will suffice to have fastened the panel with only two screws, but by the end of the shift all laid panels must be fastened with all required screws and the panels that have not been mounted yet must be tied in a pack!
- Before the final fastening of panels to a steel construction the longitudinal joints of panels (locks) are fastened with self-drilling (thread-cutting) ∅ 4.8 mm or ∅ 5.5 mm screws (P03) on a corrugation, spaced apart by 500 mm at most (see Fig. 29).
- For fastening onto the bearing construction (purlins), self-drilling or thread-cutting stainless screws with a sealing washer and a calotte (P01) or a thread under the head (P02 or P04) are normally used. The type and count of the screws is determined by a structural designer or the project documentation. Recommended types of screws and their positioning are depicted in the Kingspan Design & Construction Guide.
- Types of fastening components for different kinds of constructions (e.g.: cold/hot -rolled profiles, blockhouse construction, wooden construction) are listed in the Kingspan Design & Construction Guide.
- As an example we present an outline on mounting panels onto thick-wall profiles, using thread-cutting screws (P01):
- After precise embedding of the panel, a hole for a screw is drilled into the panel and the bearing construction. The diameter of the hole is to be determined according to the bearing constructions' profile thickness and the information provided by the screw manufacturer.
- The panel is fastened tight by using a tightening tool. It is necessary that the screw is appropriately tightened (see Fig. 65) so that the sealing washer can perform its function.
- Before the ultimate tightening of screws, it is necessary that a local removal of protection plastic film is performed. A complete removal is to be performed after the assembly has been finished, within 4 weeks after its completion.

Solution to end lap

- If the distance from eaves to ridge is filled with two or more panels (panel rows), it is necessary to create quality longitudinal joints in between these panels (see Fig. 30).
- The individual rows of roof panels overlap by the length of the panel's cutback. If these cutbacks are required by the implementation documentation, it is possible to fabricate them during manufacture in accordance to their given types and lengths. The type of a cutback is defined by how the insulation is separated and by orientation (left "L" and right "R" cutback) (see Attachment 2).
- The minimum cutback length is determined by the roof pitch:
  - ≤ 10 % (5.71 °) - 250 mm
  - > 10 % (5.71 °) - 200 mm

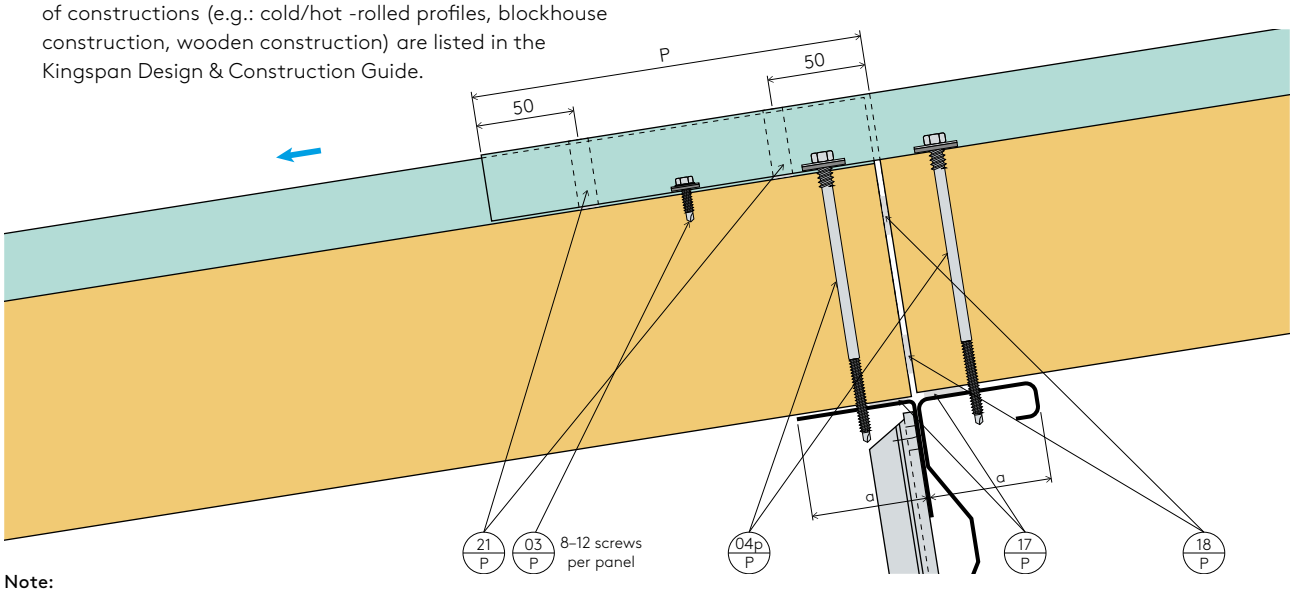

Note:

P Length as a function of the roof pitch:
– P = 200 mm for a roof pitch > 10 % (cutback made during fabrication)
– P = 250 mm for a roof pitch ≤ 10 % (cutback made during fabrication)
Kingspan only manufactures cutbacks (overlaps) shorter or equal to 250 mm.

a According to structural/static requirements

Fig. 30. – Detail D11.2. – Longitudinal Joint of an FF Panel

- For creating a quality longitudinal panel joint, we recommend the following procedure:
- If required the panels may be supplied with separation plastic film inserted and no cutback.
- Before starting assembly the mineral insulation and the bottom metal plate must be cut off and removed.
- Remove any remaining thermal insulation from the top trapezoidal metal sheet and cut off the metal ending at the lock in the length of panels' overlap.
- The overlapping surface needs to be rid of the protective plastic film and the contingent burrs, regardless whether they were formed upon cutting or manufacture.
- If this is specifically called for in the implementation documentation, use two pieces of the self-adhesive expansion sealing tape PU 20 × 4 (20) mm P(18) to fill the occasional gap in the longitudinal joint between panels prior to the placing of the top panel.
- Before mounting the top panels apply 2 strips of butyl self-adhesive sealing tape 10 × 3 mm (P21) onto the bottom row of panels. Always choose the positioning of this tape on both ends of this overlap.
- For low-pitched roofs (up to approximately 6°) the longitudinal joint is fastened at the groove between panels with self-drilling screws (P03) (8 per panel) whose positioning and count is stated in the Kingspan.

KS1000 FF/HTL Hybrid Rooflight

Design & Construction Guide
Important notices

- If a panel is damaged during assembly, mark the affected area with an alcohol-based felt-tipped pen immediately and see to it that a timely and proper repair is effected. After the assembly has finished, remove all waste material and rough dirt.
- When assembling these panels, follow the details outlined in the implementation documentation or the suggestions presented in the Kingspan Design & Construction Guide.
- At the place of the panel end by the transverse joints and mangers, we recommend filling free waves, if any, with a PU foam
- **It needs to be assured that water does not penetrate to the core of FF panels (insulation core consisting of mineral wool boards) during storage or assembly!**
- Given the possibility of violating the statics of a panel (delaminating, rupture), it is forbidden, especially for long panels, to be hoisted or otherwise manipulated with the flat side down without being additionally supported along the length of the panel.
- We recommend that mineral-wool-filled panels (RH, RF, FF) being laid vertically are manipulated after they have been rotated by the angle of 90° to their lengthwise axis; or even better, while using an assembly tool ensuring their stability is retained (see Fig. 31).
- We recommend that mineral-wool-filled panels (RH, RF, FF) being laid horizontally are manipulated using assembly accessories ensuring their stability is retained, e.g. a beam tie or modified carpentry clips (see Fig. 32).
- It is necessary to be aware of the danger of a panel lock's deformation or partial separation (delaminating) of the exterior sheathing from the thermal insulation. Therefore it is forbidden to hoist a panel in its lock at the metal plate only.
- Avoid the danger of scraping the exterior sheathing by shuffling the panel on an unclean surface or using unsuitable binding or assembly accessories (see Attachment 1).

WALL PANELS NC, NF, TF, TL, RB AND RF

PREPARING FOR ASSEMBLY

- The assembly is usually carried out before mounting roof panels. The panels should be oriented along the direction of the prevailing wind.
- These panels can be laid out both vertically and horizontally. The bearing construction and assembly details must be in conformity with the required lay-out.
- It is necessary to adhere to the detailed implementation documentation and apply PE adhesive sealing tapes onto the bearing construction and lower parts of the metal sheeting before the panel is laid out.
- Wall panels NC, NF, TF and TL comprise IPN/QuadCore thermal insulation and exterior and interior covering layers of profiled sheet metal.
- Wall panels RF comprise mineral wool and exterior layers of profiled sheet metal.
- Where there it is not possible to use lengths corresponding to the wall dimensions the vertically laid panels are mounted in rows from tongue to groove in the direction of assembly that is prescribed in the detailed implementation documentation (the direction of the prevailing winds).
- If there is no sealing tape applied in the groove of the panel's lock (RF panels), or this tape has been damaged in any way, it is necessary to assure that spare tape has been applied to the groove that is closer to the panel's exterior side before the assembly begins. This tape is a part of the panel delivery (see Kingspan Design & Construction Guide).
- If the interior humidity is above the normal level or if this is specifically called for in the implementation documentation, we recommend using vapor-proof tape (∅ 6 mm) or caulking on the lengthwise channel from the interior side of the panel. To meet this requirement it is also vital to apply vapor-proof caulking or sealants on other joints of the wall's surface as well.
- If required by the project documentation, other components e.g. a fire-proof tape may be applied in the groove situated closer to the panel's interior side.
- The locks of panels for cold storage (NC, TL panels) are not fitted with an anti-condensation sealing tape but with a paper tape instead. This is to be removed before starting the assembly. Then the panel's lock is treated with special PUR foam (less volume after expansion) or adhesive caulking (see Cold-storage Handbook).

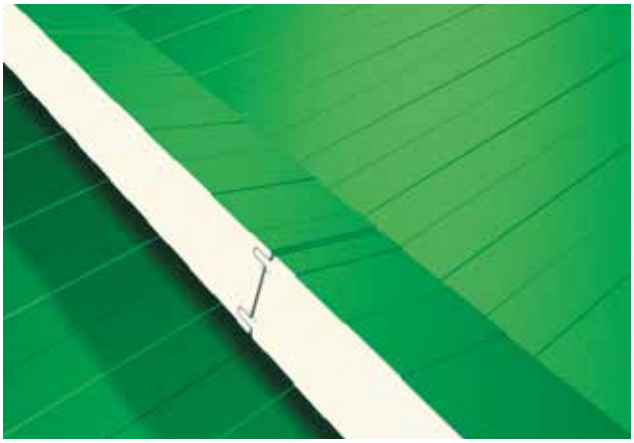

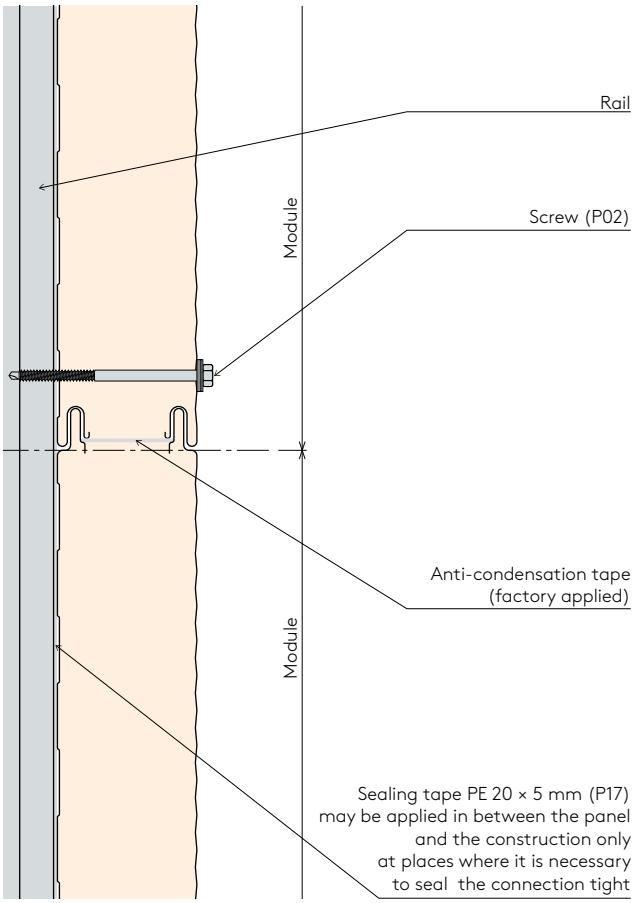

Fig. 43. – Detail D10.3. – Locking and anchoring of a TF panel

ASSEMBLY AND FIXATION OF THE PANELS

- Before mounting the panel, make sure that the panel is placed precisely (we recommend drawing control marks on the steel construction) and that the lengthwise joint is properly "seated" so that tightness of the connection is ascertained.
- For fastening panels onto the bearing construction thread-cutting and self-drilling stainless steel screws with sealing washers are to be used (P02 or P02p). The type and count of screws is determined by a structure designer or the project documentation. Recommended types of screws and their positioning are depicted in the Kingspan Design & Construction Guide. (see Fig. 43)
- Types of fastening components for different kinds of constructions (e.g.: cold/hot -rolled profiles, blockhouse construction, wooden construction) are listed in the Kingspan Design & Construction Guide.
- As an example we present an outline on mounting panels onto thick-wall profiles using thread-cutting screws (P02 or P02p):
- After precise embedding of the panel, a hole for a screw is drilled into the panel and the bearing construction. The diameter of the hole is to be determined according to the bearing constructions' profile thickness and the information provided by the screw manufacturer.
- The panel is fastened tight by using a tightening tool. It is necessary that the screw is appropriately tightened so that the sealing washer can perform its function.
- For fastening RB / RF panels, use screws with ∅ 2 mm washers. (P02p)
- For anchoring TF/TL/NC/NF panels, use screws with ∅ 16 mm washers. (P02)
- Before the ultimate tightening of screws, it is necessary that a local removal of protection plastic film is performed. A complete removal is to be performed after the assembly has been finished, within 4 weeks after its completion.
- After the ultimate fastening of panels onto the bearing construction the lengthwise joints of horizontally laid panels is filled with thermal insulation (assembly PUR foam or mineral wool).
- We recommend that the bottom horizontally-laid panels be fastened onto a plinth profile (Z 04) that is attached to a concrete curb by every 500 mm or so (see Fig. 44)
- In some assembly details it may be necessary to cut the panels back (e.g. attaching to a prefabricated channel behind the loft). If the cutback is required by the implementation documentation, it is possible to make these cutbacks while manufacturing the panels in accordance to the given cutback's type and length.
  Type of cutback is defined by how the insulation is separated and by orientation (left "L" and right "R" cutback) (see attachment 4).

Fig. 45.: Manipulation an RF panel, on a horizontal lay-down ("Iron" – a clamp in the panel's lock – always 2 pieces at least)

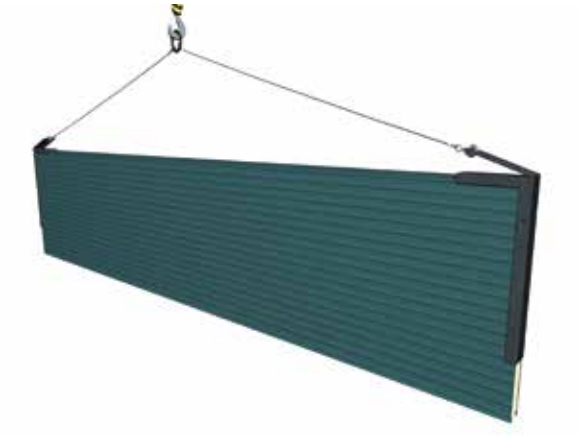

Fig. 46.: Manipulation the panel TF,TL,NC,NF (RB/RF) on a horizontal lay-down. ("Side Carrier" – fixed by 2 pins on either side of the panel)

Fig. 47.: Manipulation the panel TF,TL, NC, NF (RB/RF < 7,000 mm) on a vertical lay-down ("U-carrier" – fixed by 2 pins)

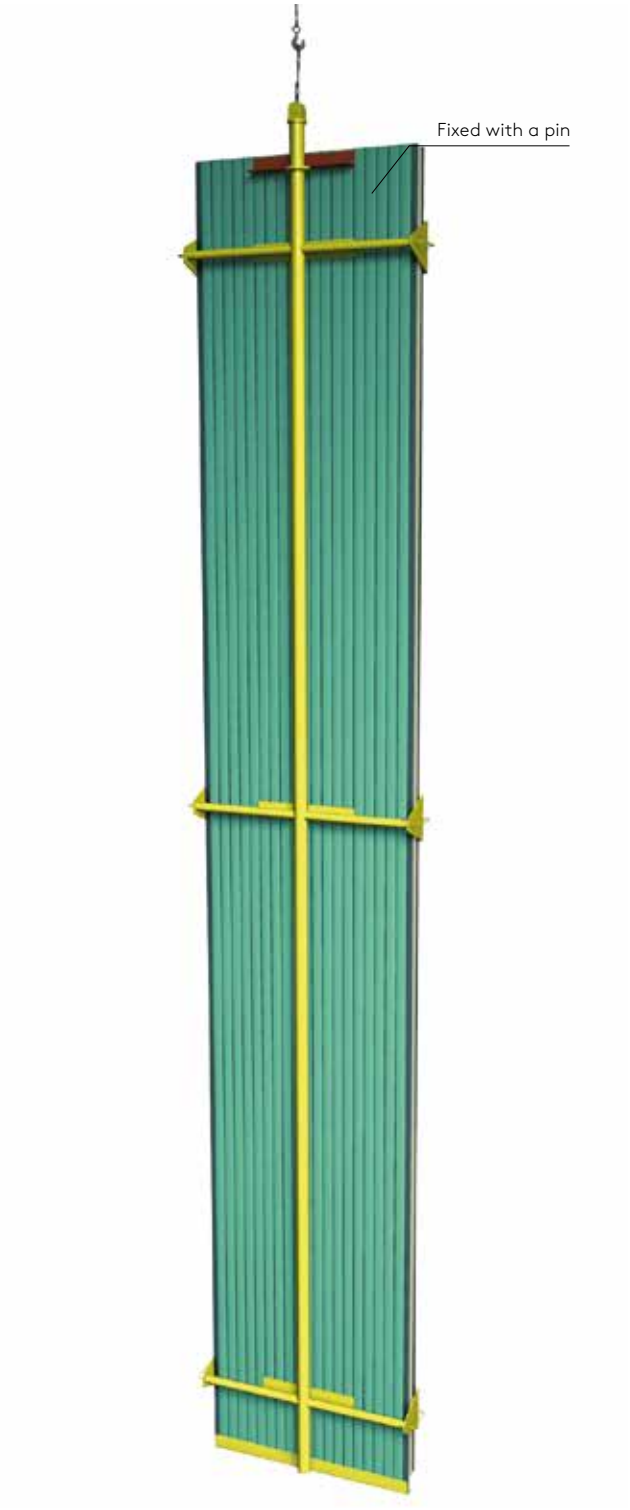

Fig. 48.: Manipulation the panel RB/RF on a vertical lay-down with the panel's length exceeding or equal to 7,000 mm. ("Spine Frame" – ensuring the panel's resistance to deflection, fixed by adjustable pins on sides)

WALL PANEL KS1000 AWP and AWP FLex / AT

Preparing for assembly

- The assembly is usually carried out before mounting the roof panels. The panels should be oriented against the direction of the prevailing wind.
- These panels can be laid out both vertically and horizontally. The bearing construction and assembly details must be in conformity with the required lay-out.
- It is necessary to adhere to the detailed implementation documentation and apply the PE adhesive sealing tapes onto the bearing construction and lower parts of the metal sheeting before the panel is laid out.
- Wall panels KS1000 AWP /AWP Flex comprise QuadCore or IPN core insulation and exterior and interior covering layers of profiled sheet metal.
- Where there it is not possible to use lengths corresponding to the wall dimensions the vertically laid panels are mounted in rows from tongue to groove in the direction of assembly that is prescribed in the detailed implementation documentation (against the direction of the prevailing winds).
- If there is no sealing tape applied in the groove of the panel's lock, or this tape has been damaged in any way, it is necessary to make sure that this tape has been applied to the groove before the assembly begins. The tape is part of the panel delivery (see Fig. 49).
- If the interior humidity is above the normal level or if this is specifically called for in the implementation documentation, we recommend using vapor-proof tape (diameter of 6 mm) or caulking on the lengthwise channel from the interior side of the panel. To meet this requirement it is also vital to apply vapor-proof caulking or sealants on other joints of the wall's surface as well.

Assembly and fixation of the panels

- Before mounting the panel, make sure that the panel is placed precisely (we recommend drawing control marks on the steel construction) and that the lengthwise joint is properly "seated" so that tightness of the connection is ascertained.
- For fastening panels onto the bearing construction use thread-cutting and self-drilling stainless steel screws with sealing washers (∅ 16 mm, P04). The type and count of screws is determined by a structure designer or the project documentation. Recommended types of screws and their positioning are depicted in the Kingspan Design & Construction Guide.
- Types of fastening components for different kinds of constructions (e.g.: cold/hot-rolled profiles, blockhouse construction, wooden construction) are listed in the Kingspan Design & Construction Guide
  As an example we present an outline on mounting panels onto thick-wall profiles using thread-cutting screws (P04):
- After precise embedding of the panel, a hole for a screw is drilled into the panel and the bearing construction. The diameter of the hole is to be determined according to the bearing constructions' profile thickness and the information provided by the screw manufacturer.
- The panel is fastened tight by using a tightening tool. It is necessary that the screw is appropriately tightened (see Fig. 61) so that the sealing washer can perform its function.
- Before the ultimate tightening of screws, it is necessary that a local removal of protection plastic film is performed. A complete removal is to be performed after the assembly has been finished, within 4 weeks after its completion.
- After the ultimate fastening of panels onto the bearing construction fill the lengthwise joints of horizontally laid panels with thermal insulation (assembly PUR foam or mineral wool). At the end of panels that are laid in this way the free space by locks is to be stuffed with a sealing profile, expansion tape or assembly foam.
- We recommend that the bottom horizontally-laid panels be fastened onto a plinth profile (Z 03) that is attached to concrete curb by every 500 mm or so. (see D30.5; D30.6 in the Kingspan Systems' Guide)
- In some assembly details it may be necessary to cut the panels back (e.g. attaching to a prefabricated channel behind the loft). If the cutback is required by the implementation documentation, it is possible to make these cutbacks while manufacturing the panels in accordance to the given cutback's type and length. Type of cutback is defined by how the insulation is separated and by orientation (left "L" and right "R" cutback) (see attachment 4).
- When installing wall panels with secret fixing (AWP / AWP Flex / AT), original Kingspan Z15a or Z15b spread washers are mandatory to use (Fig. 4.12.2).

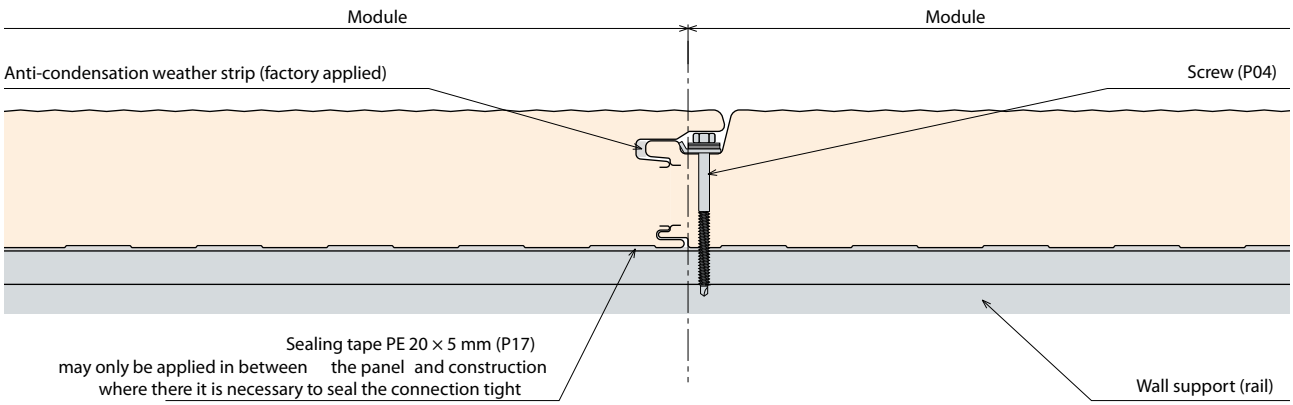

Fig. 49. – Detail D10.4. – Lock and anchoring of the AT / AWP / AWP FLex panel

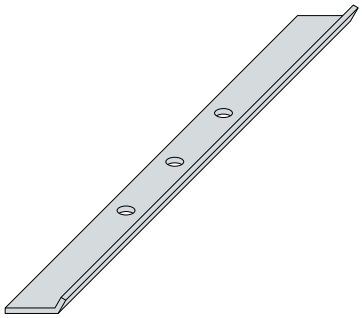

Fig. 4.12.2: Dispenser Z15a

Before final tightening of the screws, remove locally a protective foil from panels, complete removal of the foil have to be provided no later than 4 weeks after panel installation.

In the case of PVF or PES coatings (RAL 9006 and 9007 only) to ext. sheet metal panel is covered with protective foil for a technological reason, which must be partially removed (from longitudinal joint) before installing the panels.

The transverse joint of the horizontally laid panels is filled with thermal insulation after the final fastening according to fire requirements. The end of such panels have to be sealed with sealing profile, expansion tape or sealing compound, (see Fig. 4.12.3).

We recommend for panels horizontally laid use of plinth start profile (Z03) that is attached at approx. 500 mm. (see the Project and Construction Guide Kingspan).

Sometimes panel cuts are required (eg. connection with a prefabricated gutter). If that's so this is required to consider this in the order documentation before production panels with cutbacks.

The type of cutback is distinguished by isolation and further separation according to the cutting orientation on the left side "L" and the right cutout "P" (panel) (see Annex 4).

Important notes

To get a better look, we recommend it in the place of visible cut edges to use the cover profiles.

Although these cuts meet production tolerances, they can not always be completely perpendicular to the longitudinal axis of the panels.

Due to production and assembly tolerances of the panels and load capacity of construction, we recommend making holes for openings (windows, door) and their construction after panel assembly.

When installing these panels, please follow the details given in the application documentation or, where applicable, details recommended in the Technical Kingspan Guide.

Note:

a according to designer / statics requirements

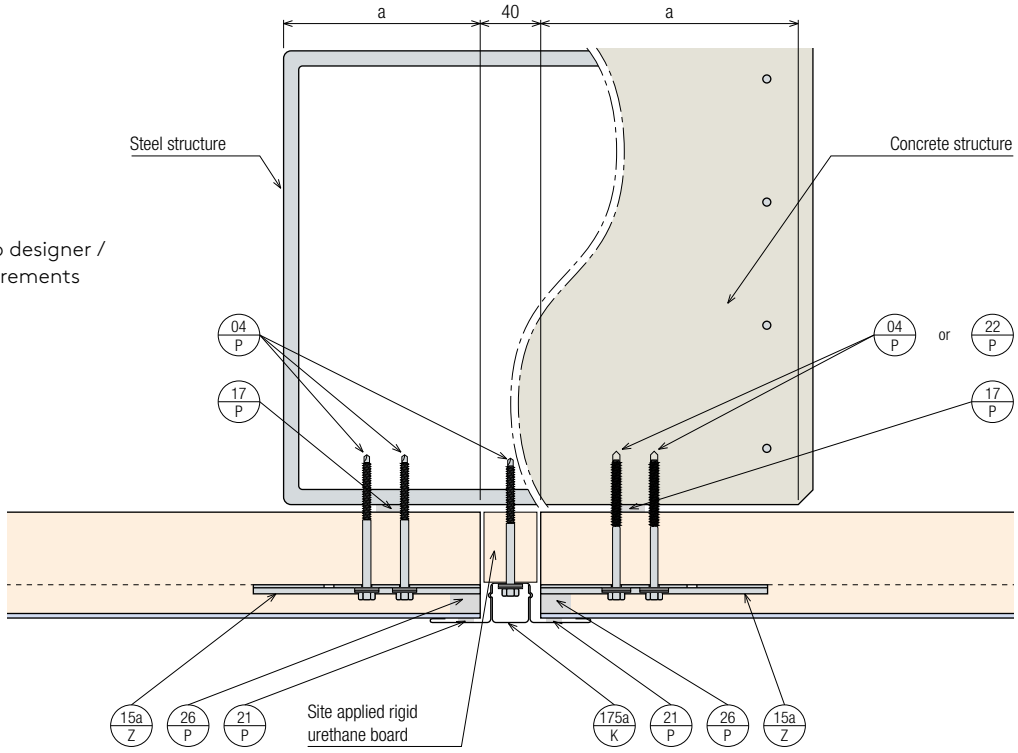

Fig. 4.12.3: transverse joint of horizontally laid panels

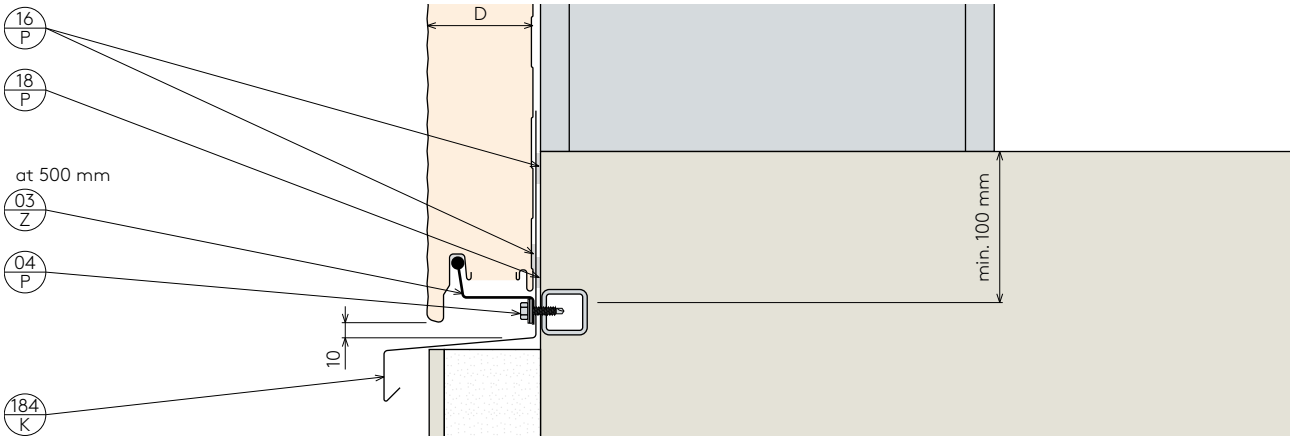

Fig. 50.: Detail D30.6. – Horizontally laid AWP / AWP FLex panels on a plinth

Important Notices

- To achieve a better final look we recommend applying covering battens on the visible cutting edges of panels.
- Although these cuts do satisfy production tolerance, they are not necessarily perpendicular to the lengthwise axis of panels.
- Given the likelihood of individual production and assembly tolerances of panels adding up together, we recommend making the openings-filling components (doors, windows) and their assembly after setting and assembling the panels, or dealing with the continuity of the openings-filling components and panels aside from the panel locks.
- When assembling these panels, follow the details outlined in the implementation documentation or the suggestions presented in the Kingspan Design & Construction Guide.
- Given the possibility of violating the statics of a panel (delaminating, rupture) it is forbidden, especially for long panels, to be hoisted or otherwise manipulated with the flat side down without being additionally supported along the length of the panel.
- We recommend that panels being laid vertically be manipulated after they have been rotated by the angle of 90° to their lengthwise axis; or even better, while using an assembly tool ensuring their stability is retained (Fig. 52.)
- We recommend that panels being laid horizontally be manipulated using assembly accessories ensuring that their stability is retained, e.g. modified carpentry clips (Fig. 51).
- It is necessary to be aware of the danger of a panel lock's deformation or a partial separation (delaminating) of the exterior sheathing from the thermal insulation. Therefore it is forbidden to hoist a panel in its lock by the metal plate only. Avoid the danger of scraping the exterior sheathing by shuffling the panel on an unclean surface or using unsuitable binding or assembly accessories. (see Attachment 1)
- Wall panels are fastened to the bearing construction gradually from one side support, through the middle support to the other side support.
- **It is strongly unadvised to proceed by fastening side supports first and the middle support in the end!**

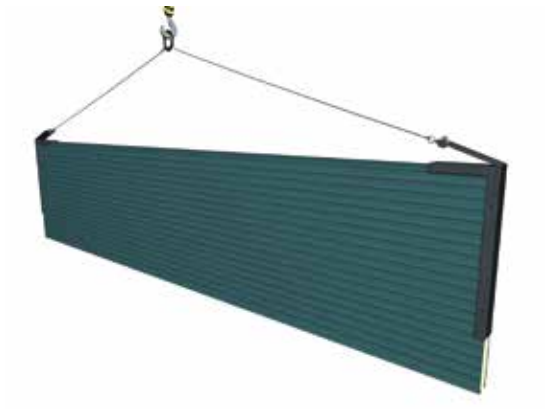

Fig. 51.: Manipulation with an AWP / AWP Flex panel on a horizontal lay-down.
("Side Carrier" – fixed by 2 pins on either side of the panel)

Fig. 52.: Manipulation with an AWP / AWP FLex panel, on a vertical lay-down.
("U-carrier" fixed by two pins)

WALL PANEL KS1000 RH/FH

PREPARING THE ASSEMBLY

- The assembly is usually carried out before mounting the roof panels. The panels should be oriented against the direction of the prevailing wind.
- These panels can be laid out both vertically and horizontally. The bearing construction and assembly details must be in conformity with the required lay-out.
- It is necessary to adhere to the detailed implementation documentation and apply the PE adhesive sealing tapes onto the bearing construction and lower parts of the metal sheeting before the panel is laid out.
- Wall panels KS1000 RH comprise mineral fiber thermal insulation and covering layers of profiled sheet metal on both sides.
- Where there it is not possible to use lengths corresponding to the wall dimensions the vertically laid panels are mounted in rows from tongue to groove in the direction of assembly that is prescribed in the detailed implementation documentation (against the direction of the prevailing winds).
- If the interior humidity is above the normal level or if this is specifically called for in the implementation documentation, we recommend using vapor -proof tape (diameter 6 mm) or caulking on the lengthwise channel from the interior side of the panel. To meet this requirement it is also vital to apply vapor-proof caulking or sealants on other joints of the wall's surface as well. (see Fig. 54)
- If required by the project documentation, it is also possible to apply a fire-protection tape into the groove which is closer to the interior side of the panel.

- When installing wall panels with secret fixing (FH), original Kingspan Z15B spread are mandatory to use.

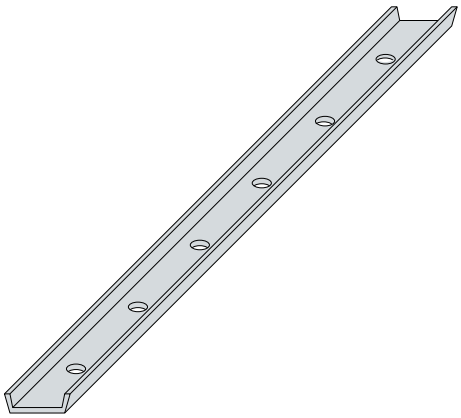

Fig. 53. – Spread footing washer

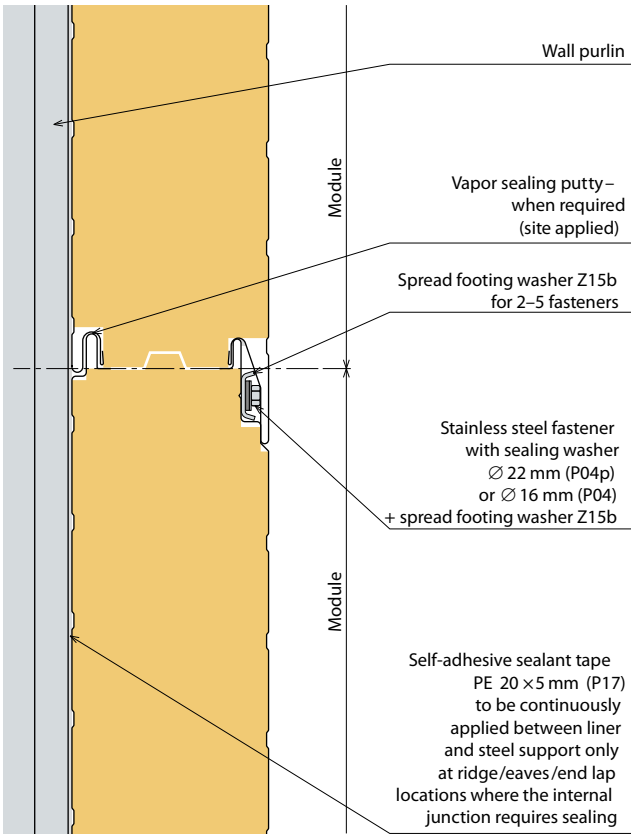

Fig. 54. – Detail D10.13. – Lock and Anchoring of an RH/FH Panel

Assembly and Fixation of the Panels

- Before mounting the panel, make sure that the panel is placed precisely (we recommend drawing control marks on the steel construction) and that the lengthwise joint is properly "seated" so that tightness of the connection is ascertained.
- For fastening panels onto the bearing construction use thread-cutting and self-drilling stainless steel screws with ∅ 22 mm sealing washers. The type and count of screws is determined by a structure designer or the project documentation. Recommended types of screws and their positioning are depicted in the Kingspan Design & Construction Guide.
- Types of fastening components for different kinds of constructions (e.g.: cold/hot-rolled profiles, blockhouse construction, wooden construction) are listed in the Kingspan Design & Construction Guide.
- As an example we present an outline on mounting panels onto thick-wall profiles using thread-cutting screws (P04p):
- After precise embedding of the panel, a hole for a screw is drilled into the panel and the bearing construction. The diameter of the hole is to be determined according to the bearing constructions' profile thickness and the information provided by the screw manufacturer.
- The panel is fastened tight by using a tightening tool. It is necessary that the screw is appropriately tightened (see Fig. 65) so that the sealing washer can perform its function.
- For an easier fixation and reducing the risk of over-tightening the screws (resulting in the panel lock's deformation) there is a need to use spread footing washers (see Fig. 28). In combination with a spread footing washer it is necessary to apply 2 screws at least!
- Before the ultimate tightening of screws, it is necessary that a local removal of protection plastic film is performed. A complete removal is to be performed after the assembly has been finished, within 4 weeks after its completion.
- After the ultimate fastening of panels onto the bearing construction fill the lengthwise joints of horizontally laid panels with thermal insulation (assembly PUR foam or mineral wool). At the ends of panels that are laid in this way the free space by locks is to be stuffed with a sealing profile, expansion tape or assembly foam.
- We recommend that the bottom horizontally-laid panels be fastened onto a plinth profile (Z 13) that is attached to a concrete curb by every 500 mm or so. (see Fig. 55 and 56).

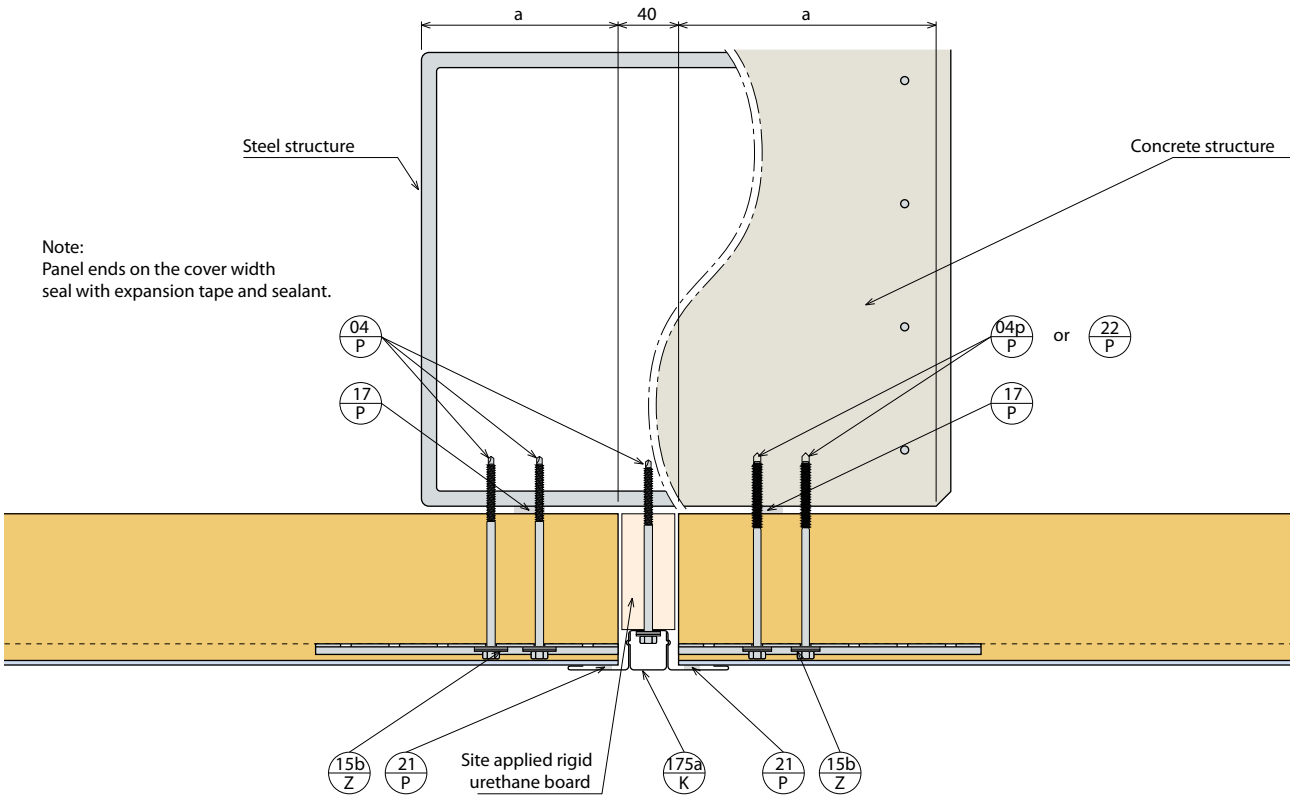

Fig. 4.13.3: transverse joint of horizontally laid panels

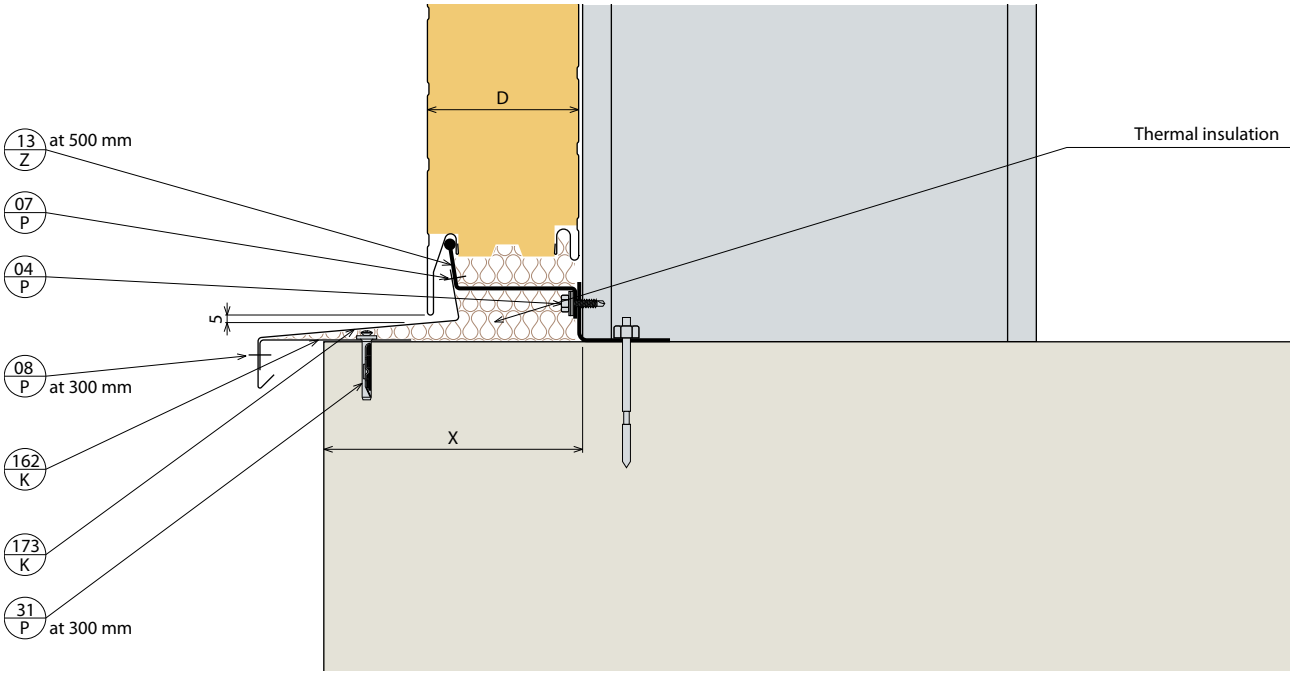

Fig. 55.: Detail D30.11. – Horizontally laid RH/FH panel on a plinth

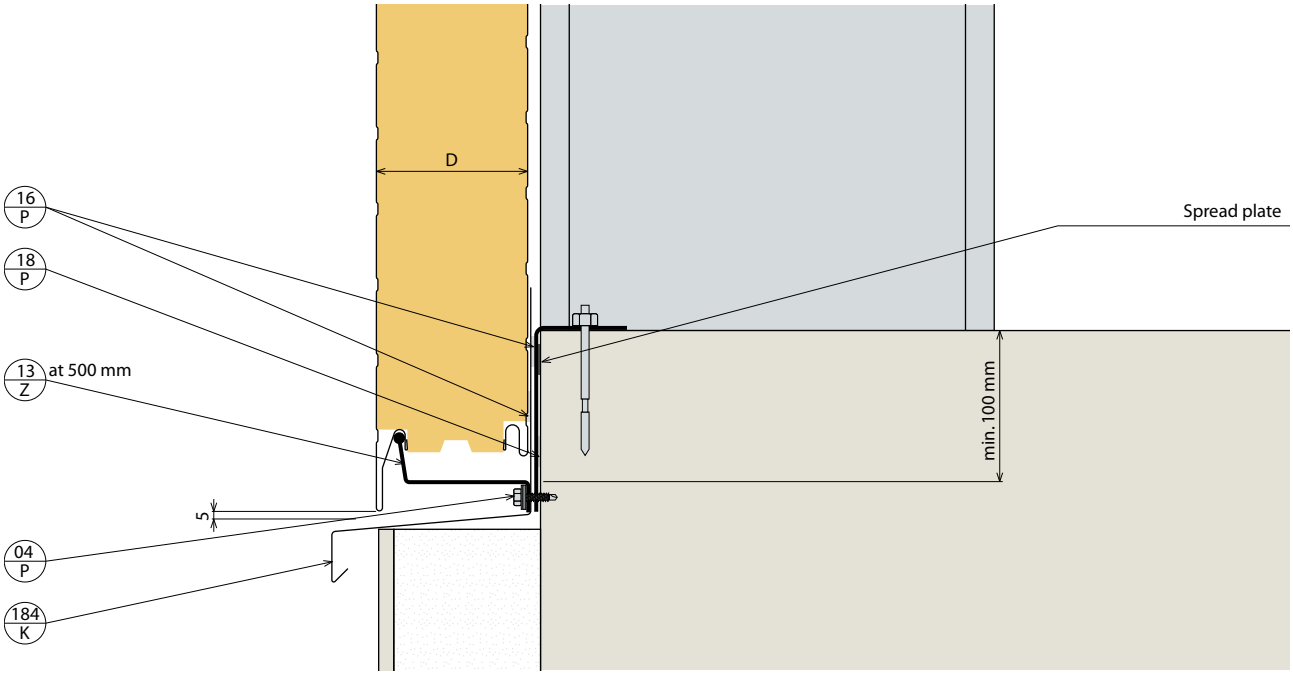

Fig. 56.: Detail D30.12. – Horizontally laid RH/FH panel on a plinth

Important Notices

- To achieve a better final look we recommend applying covering battens on the visible cutting edges of panels.
- Although these cuts do satisfy production tolerance, they are not necessarily perpendicular to the lengthwise axis of panels.
- Given the likelihood of individual production and assembly tolerances of panels adding up together, we recommend making the openings-filling components (doors, windows) and their assembly after setting and assembling the panels, or dealing with the continuity of the openings-filling components and panels aside from the panel locks.
- When assembling these panels, follow the details outlined in the implementation documentation.
- Given the possibility of violating the statics of a panel (delaminating, rupture), it is forbidden, especially for long panels, to be hoisted or otherwise manipulated with the flat side down without being additionally supported along the length of the panel.
- We recommend that mineral-wool-filled panels (RF, RH, FF, AF) being laid vertically be manipulated after they have been rotated by the angle of 90 ° to their lengthwise axis; or even better, while using an assembly tool ensuring their stability is retained (as depicted in Fig. 59 and 60).
- We recommend that mineral-wool-filled panels (RF, RH, FF, AF) being laid horizontally be manipulated using assembly accessories ensuring their stability is retained, e.g. a suspension string (as depicted in Fig. 57 and 58).
- It is necessary to be aware of the danger of a panel lock's deformation or a partial separation (delaminating) of the exterior sheathing from the thermal insulation. It is especially forbidden to hoist a panel in its lock by one metal plate only.
- We recommend protecting the thermal insulation of panels from rain during transportation, storage and assembly.
- Avoid the danger of scraping the exterior sheathing by shuffling the panel on an unclean surface or using unsuitable binding or assembly accessories.
- Wall panels are fastened to the bearing construction gradually from one side support, through the middle support to the other side support.
- **It is strongly unadvised to proceed by fastening side supports first and the middle support in the end!**

Fig. 57.: Manipulation with an RH panel on a horizontal lay-down. ("Iron" – a clamp in the panel's lock – always 2 pieces at least)

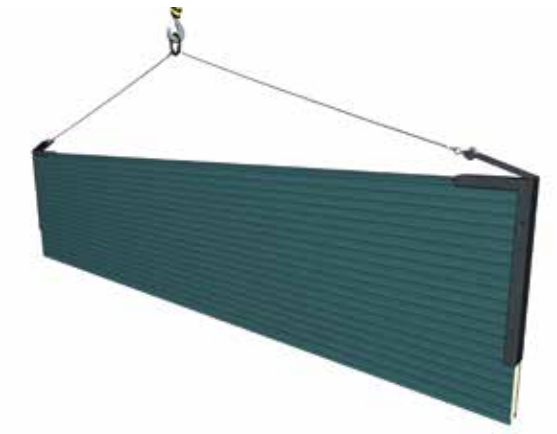

Fig. 58.: Manipulation with an RH panel on a horizontal lay-down. ("Side-carrier" – fixed by two pins on either side of the panel)

Fig. 59.: Manipulation with an RH < 7,000 mm panel on a vertical lay-down. ("U -carrier" – fixed by two pins)

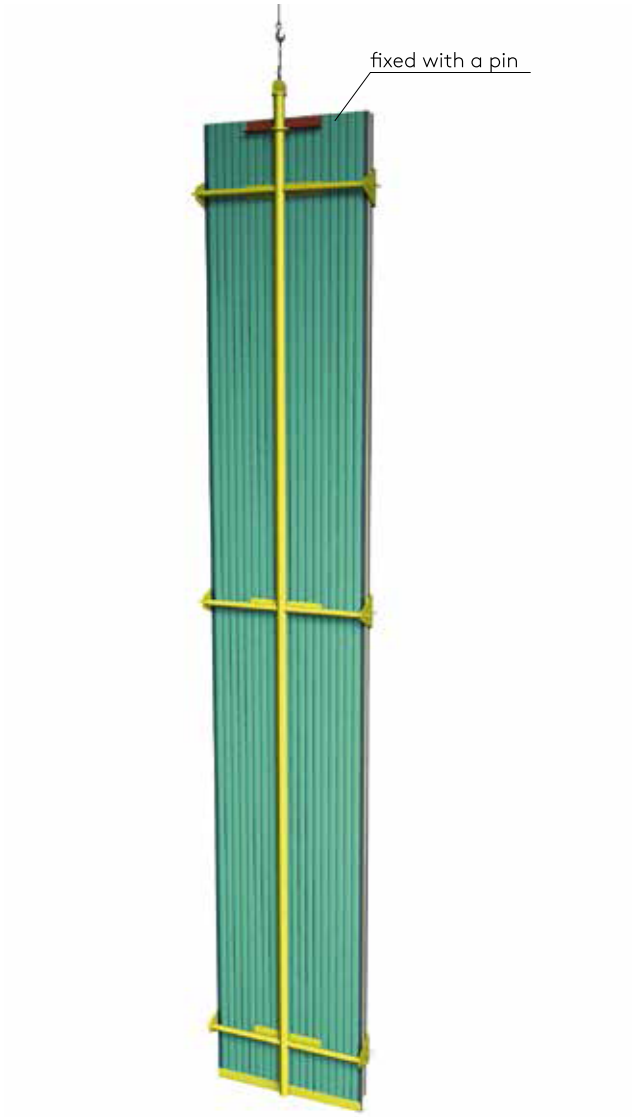

Fig. 60.: Manipulation with an RH panel on a vertical lay-down with the panel's length exceeding or equal to 7,000 mm. ("Spine Frame" – ensuring the panel's resistance to deflection, fixed by adjustable pins on sides)

Wall Panel KS1000 RW

PREPARING FOR ASSEMBLY

- The assembly is usually carried out before mounting the roof panels. The panels should be oriented against the direction of the prevailing wind.
- These panels can be laid out both vertically and horizontally. The bearing construction and assembly details must be in conformity with the required lay-out.
- It is necessary to adhere to the detailed implementation documentation and apply the PE adhesive sealing tapes onto the bearing construction and lower parts of the metal sheeting before the panel is laid out.
- Wall panels KS1000 RW are identical to the roof RW panels, which comprise a trapezoidal metal sheet with three exterior ridges, a profiled interior metal sheet and thermal insulation QuadCore or IPN.

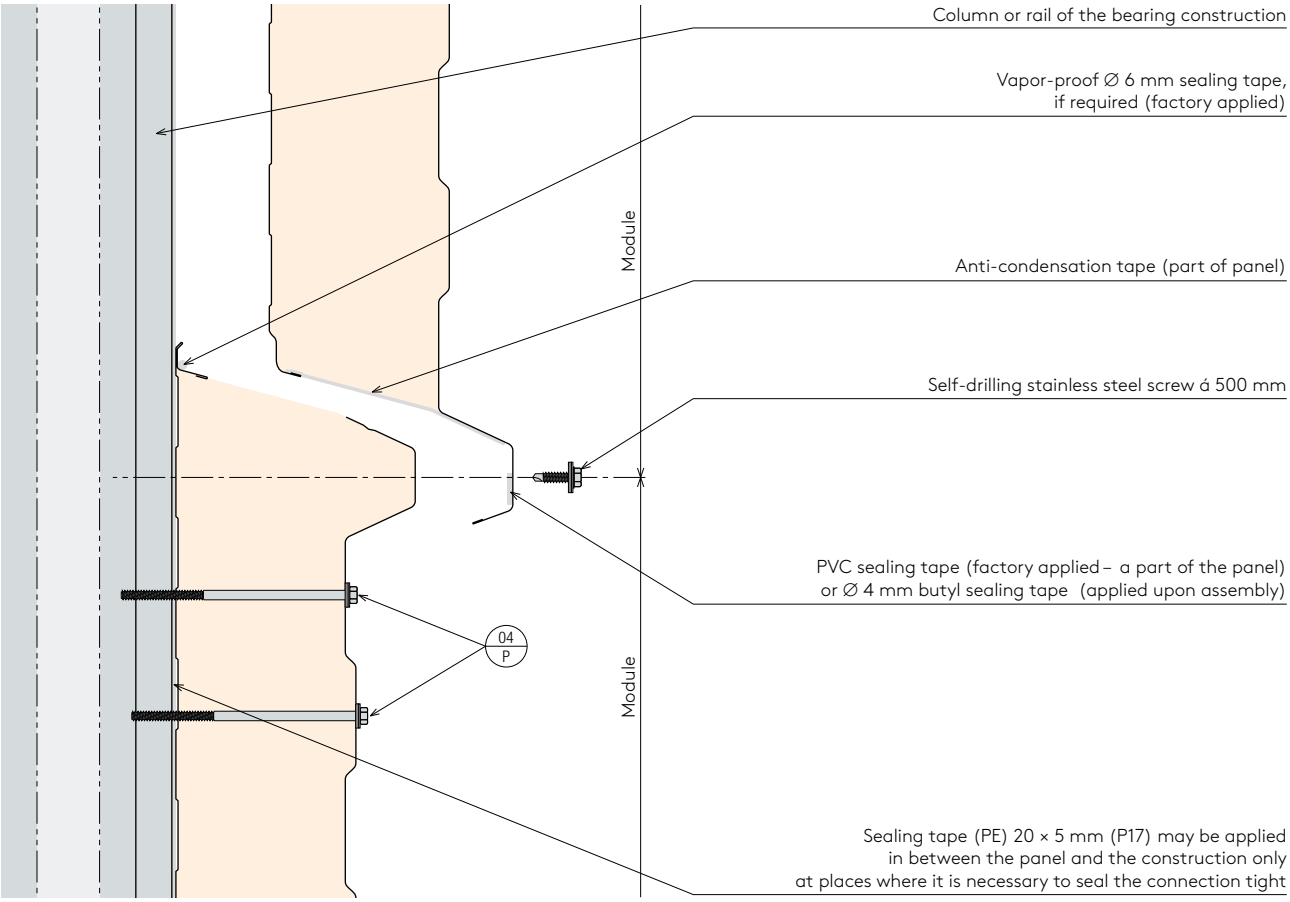

Fig. 61. – Detail D10.7. Lock of a RW panel

- Where there it is not possible to use lengths corresponding to the wall dimensions the vertically laid panels are mounted in rows from tongue to groove in the direction of assembly that is prescribed in the detailed implementation documentation (against the direction of prevailing winds).
- If there is no sealing tape applied in free ridge of the panel, or this tape has been damaged in any way, it is necessary to assure that spare tape has been applied before the assembly begins. If this is specifically called for in the implementation documentation, the present sealing tape may be replaced with ∅ 4 mm butyl sealing tape (applied upon assembly) (P29). The required sealing tape is a part of the panel delivery. If the interior humidity is above the normal level or if this is specifically called for in the implementation documentation, we recommend using vapor-proof tape (diameter 6 mm) or caulking on the lengthwise channel from the interior side of the panel. To meet this requirement it is also necessary to add vapor-proof caulking or sealants on other joints of the wall's surface as well.**Assembly and Fixation of the Panels**
- Before mounting the panel, make sure that the panel is placed precisely (we recommend drawing control marks on the steel construction) and that the lengthwise joint is properly "seated" so that tightness of the connection is ascertained.
- For fastening panels onto the bearing construction thread-cutting and self-drilling stainless steel screws with sealing washers are to be used. (P04). The type and count of screws is determined by a structure designer or the project documentation. Recommended types of screws and their positioning are depicted in the Kingspan Design & Construction Guide.
- Types of fastening components for different kinds of constructions (e.g.: cold/hot-rolled profiles, blockhouse construction, wooden construction) are listed in the Kingspan Design & Construction Guide.
- As an example we present an outline on mounting panels onto thick-wall profiles using thread-cutting screws (P04):
- After precise embedding of the panel, a hole for a screw is drilled into the panel and the bearing construction. The diameter of the hole is to be determined according to the bearing constructions' profile thickness and the information provided by the screw manufacturer.
- The panel is fastened tight by using a tightening tool. It is necessary that the screw is appropriately tightened (see Fig. 65) so that the sealing washer can perform its function.
- Before the ultimate tightening of screws, it is necessary that a local removal of protection plastic film is performed. A complete removal is to be performed after the assembly has been finished, within 4 weeks after its completion.

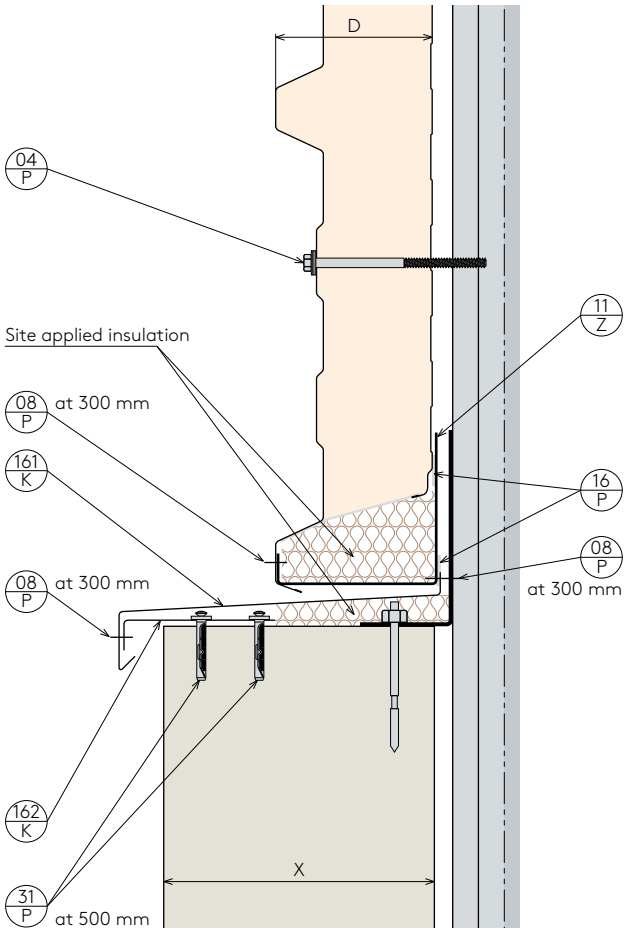

Fig. 62.: Detail D30.8. – Horizontally laid RW panel on a plinth

DEALING WITH LATERAL CONNECTIONS OF PANELS

- After the ultimate fastening of panels onto the bearing construction fill the lengthwise joints of horizontally laid panels with thermal insulation (assembly PUR foam).
- We recommend that the bottom horizontally-laid panels be fastened onto a plinth profile (Z 11) that is attached to a concrete curb by every 500 mm or so. (see Fig. 62)
- In some assembly details it may be necessary to cut the panels back (e.g. attaching to a prefabricated channel behind the attic). If the cutback is specifically called for by the implementation documentation, it is possible to make these cutbacks during the manufacturing process in accordance to the given cutback's type and length. Type of cutback is defined by how the insulation is separated and by orientation (left "L" and right "R" cutback) (see attachments 2 and 4).

IMPORTANT NOTICES

- To achieve a better final look we recommend applying covering battens on the visible cutting edges of panels.
- Although these cuts do satisfy production tolerance, they are not necessarily perpendicular to the lengthwise axis of panels.
- Given the likelihood of individual production and assembly tolerances of panels adding up together, we recommend making the openings-filling components (doors, windows) and their assembly after setting and assembling the panels, or dealing with the continuity of the openings-filling components and panels aside from the panel locks.
- When assembling these panels, follow the details outlined in the implementation documentation or the suggestion presented in the Kingspan Design & Construction Guide.
- Given the possibility of violating the statics of a panel (delaminating, rupture) it is forbidden, especially for long panels, to be hoisted or otherwise manipulated with the flat side down without being additionally supported along the length of the panel. We recommend manipulating the panel in a "standing position" (rotated around the lengthwise axis by 90°).
- It is necessary to be aware of the danger of a panel lock's deformation or a partial separation (delaminating) of the exterior sheathing from the thermal insulation. Therefore it is forbidden to hoist a panel in its lock by the metal plate only.
- Avoid the danger of scraping the exterior sheathing by shuffling the panel on an unclean surface or using unsuitable binding or assembly accessories. (see Attachment 1)
- We recommend using assembly accessories while manipulating the panels. E.g.: a beam tie or modified carpentry clasps (see Fig. 63 and 64)
- Wall panels are fastened to the bearing construction gradually from one side support, through the middle support to the other side support.
- **It is strongly unadvised to proceed by fastening side supports first and the middle support in the end!**

Fig. 63.: Manipulating an RW wall panel on a horizontal lay-down ("Beam tie" – for holding at a firm ridge)

Fig. 64.: Manipulating an RW wall panel on a vertically lay-down ("U-carrier" – fixed by 2 pins)

GENERAL INSTRUCTIONS FOR ASSEMBLING AND MANIPULATION OF PANELS

Given the possibility of violating the statics of a panel (delaminating, rupture) it is forbidden, especially for long panels, to be hoisted or otherwise manipulated with the flat side down without being additionally supported along the length of the panel.

We recommend manipulating the panel in a "standing position" (rotated around the lengthwise axis by 90°).

For manipulating mineral-wool-filled insulated panels (FR, FF, FH, RM) we recommend using assembly tools that ensure their stability is retained by employing multi-point holding system.

We recommend using assembly accessories for manipulating individual panels. It is necessary to be aware of the danger of a panel lock's deformation or a partial separation (delaminating) of the exterior sheathing from the thermal insulation. Therefore it is forbidden to hoist a panel in its lock by the metal plate only.

Avoid the danger of scraping the exterior sheathing by shuffling the panel on an unclean surface or using unsuitable binding or assembly accessories (see Attachment 1).

Wall panels are fastened to the bearing construction gradually from one side support, through the middle support to the other side support.

It is strongly unadvised to proceed by fastening side supports first and the middle support in the end!

Basic Instructions for Storage, Manipulation and Assembly of Panels is a part of every panel's delivery. You are advised to thoroughly peruse these guidelines and follow them during assembly.

Before the assembly starts it is necessary to remove possible burrs on the edges of panels. Removal of burrs is performed manually using a tempered steel spattle. In order for the washers to perform their function properly it is necessary to provide sufficient tightening of fasteners. (see Fig. 65).

CURVED WALL / ROOF CONVERSIONS

These are assembled (made) directly at the building site in combination with RW panels (see the Kingspan Design & Construction Guide).

Assembly Procedure

- Use thread-opening screws to fasten the lower (interior) sheet metal on the upper rail and lower purlin.
- Proceed with assembling of the wall cladding.
- Thermal insulation segments (PU sheets) are placed and properly glued to the curved metal plate.
- On the top of these segments place a pre-bent trapezoidal sheet metal with an identical RW panel profile alignment.
- Position the metal sheet across the wall panel and fasten them together to the bearing construction.
- At the upper part insert a "Z" profile in between the inner smooth and outer trapezoidal sheet metal and fasten it to the bearing construction and trapezoidal sheet metal with rivets.
- Finally, lay the roof panels and mount them together with the folded curved conversions onto the bearing construction with screws through the ribs. In spaces in between the ribs, tighten the connection by drilling self-drilling screws into the sheet metal.
- For this end lap follow the same assembly guidelines as for details D11 (see the Kingspan Design & Construction Guide)!

CURVED ROOFS

For curved roofs KS1000 X-dek panels may be used.

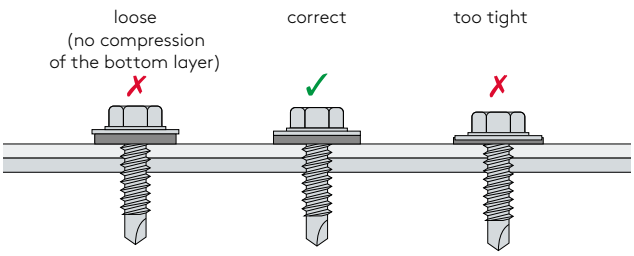

Fig. 65.: correct tightening of screws in respect of compression

PRE-SHAPED CORNER PANELS

HORIZONTALLY LAID PANELS

Kingspan offers pre-formed corner panels made from sandwich panels KS1000 AWP, AWP Flex, TF, TL, NC, NF, RB, RF and RH, that can be laid both horizontally and vertically.

Additional accessories may, significantly contribute the final appearance of a building.

The Kingspan's Technical Department offers a complete technical service available since beginning of a project until its very completion.

We offer bespoke supplementary accessories of topgrade quality ranging from simple plumbing and trimming components to various types of corner panels.

It is possible to manufacture the following types of corner panels:

- 2× cranked inner and outer corner
- 1× cranked inner and outer corner
- curved outer corner

VERTICALLY LAID PANELS

Architects have the choice to utilize function accessories and thus give the building an individual look while knowing that Kingspan is here to assist and help them to implement their ideas.

Corner panels can be manufactured according the customer's request in various colors and profile thicknesses up to:

- D ≤ 120 mm for the TF, TL, NC, NF type
- D ≤ 100 mm for the AWP/ AWP FLex type
- D ≤ 120 mm for the RF, RH types

The type of profile has to be pre-ordered. Panels for making corner panels has to be ordered along with the corresponding wall panels so as to assure an identical shade.

The options and types of panels are listed in a well arranged manner in the Draughtsman's Guide and in the brochure Accessories where you can also find manufacturing possibilities for individual components.

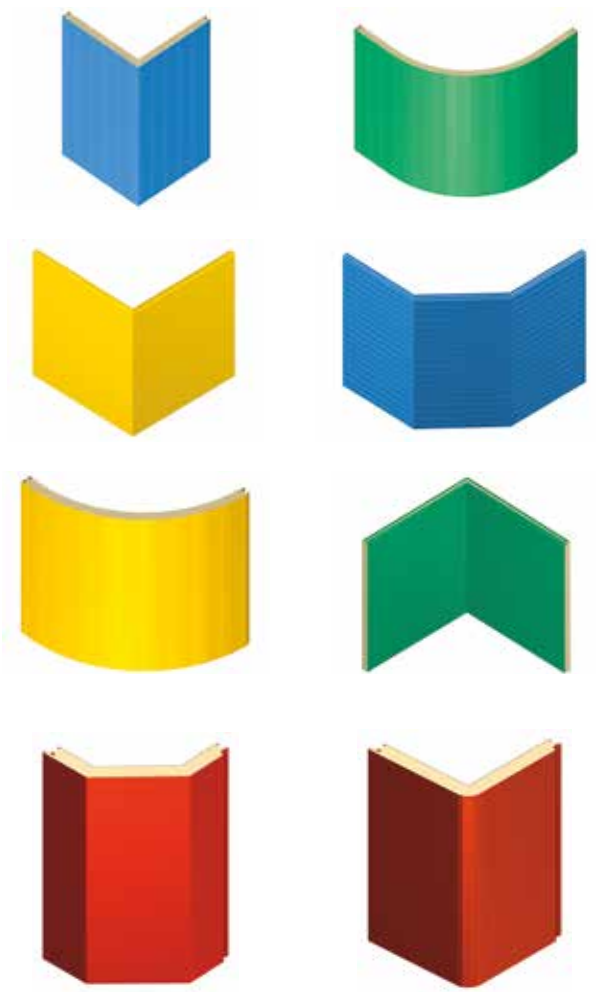

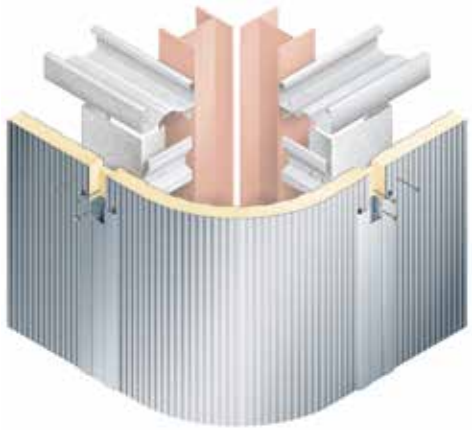

HIGHLINE GUTTERS

This system makes it possible to join different trimming parts of similar look from gutter to gable or attic together, while keeping being level (Fig. 66 and 67).

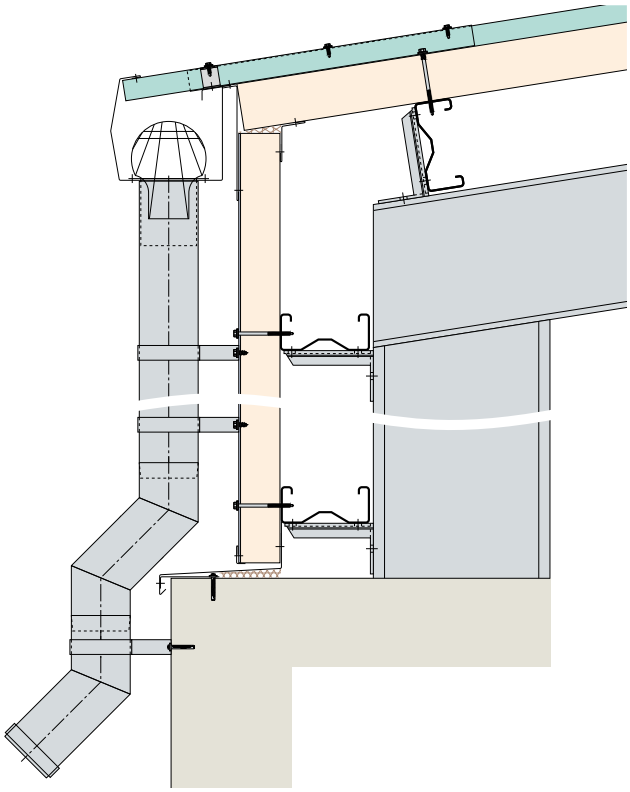

Fig. 66.: Detail of the Kingspan gutter

It can be used for drainage of KS1000 RW or FF panel roofs. The gutter is assembled by placing its upper part on pre-mounted gutter rails that have been fastened to the ribs of roof panels (in spacings according to the type of the panel – 666 mm at maximum) and by riveting the joints. The lower part is mounted in the end cutback of a panel, under trapezoidal metal sheet, and sealed up with an sealing profile and riveted to the trapezoidal metal sheet.

RW and FF panels are anchored in the gutter rail positions usually under a rib using a screw with a thread under the head (see the Kingspan Design & Construction Guide - D7. or chapter Accessories).

Before the assembly of the gutter it is necessary to measure the placement of the gutter's socket and carry out its assembly.

After you have applied putty and settled the gutter bracket (inside the gutter) upon joining the individual components, we suggest that you rivet this joint from the middle (bottom) of the bracket symmetrically to both sides (see Fig. 68).

Upon designing the use of drainage system we suggest considering installation of snow guards (see Kingspan Design & Construction Guide).

For an accurate ordering of a complete drainage system with this type of gutter please use our ordering forms.

After you have received these forms, contact the Kingspan Company - Accessories Department.

When specifying a classic semicircular gutter and its supplements use the ordering form and the detailed data in the Kingspan Design & Construction Guide as well.

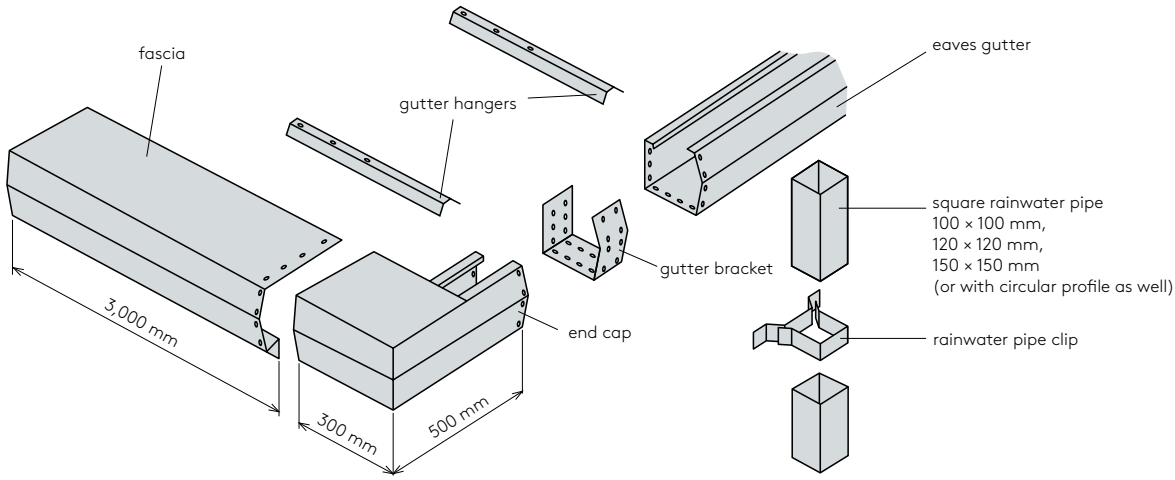

Fig. 67.: assembly of the Kingspan gutter

Insulated Gutters

For multi-storey halls and halls with shed or gable roof it is necessary to design a drainage system to indoor rainwater drainage. Kingspan offers this solution system of internal drainage by means of prefabricated insulated gutters.

Insulating core is made of hard IPN foam (thickness 40, 50, 60, 80, 100, 120 or 160 mm) or mineral fiber (thickness 60, 80, 100, 120 or 150 mm), internally covered with galvanized steel sheet thickness. 0.6 mm with 25 µm coating. On the exterior, Kingspan offers galvanized steel plate th. 0.6 mm with surface 25 µm PES (or 50 µm Spectrum) and variant with SKIN-PLATE sheet (galvanized steel sheet with PVC surface allowing hot-air welding of PVC foil).

The roof construction must allow the gutter to be applied and its dewatering in dimensions determined by drainage design of the roof. Intermediate and attic prefabricated gutters are produced in lengths L0 (length of the central part of the gutter) by default 6 000 mm and L1 (length of the gutter outer part) the total length of the gutter.

The standard tray dimensions can be adjusted to building type. In the case of non-standard dimensions, it is necessary to accurately plot and dimension the entire profile. The size of the gutter is limited by the maximum width of the bottom plate 1250 mm.

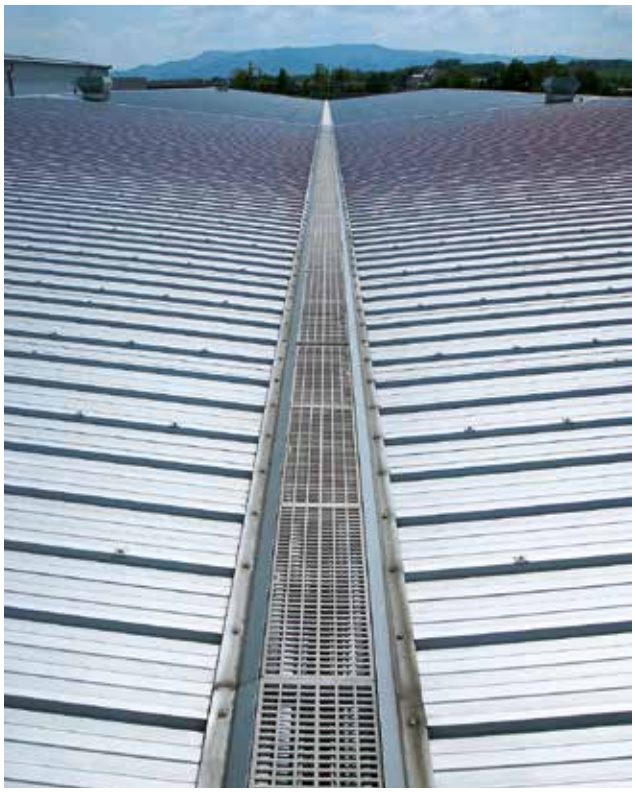

We recommend fitting prefabricated gutters to pre-made steel hooks in steel construction in distances of up to 2,000 mm and a suitable customized steel structure to their size and location.

When designing an inner gutter, keep in mind that it's vertical rain pipes must not cross with horizontal roof support elements construction (girders, bracing, etc.).

We recommend the use of foreheads for gutters and internal gutters with overflow, with accurate drawing and dimensioning needed its shape and size.

Gutters with PES or SPECTRUM coating

Note: Mounting procedure of gutters with PES or SPECTRUM is different from SKIN-PLATE option.

1) Place the first gutter element on the substructure.
2) Place the intermediate gutter segment and make sure the alignment and stacking direction is correct.
3) Fit the intermediate segment and select the position of the upper sheet of the gutter.
4) Remove temporary the intermediate segment and apply 3 strips of K + D sealant to the gun, then rivet both parts.
5) Place the next intermediate segments and the final element, analogous to the first.
6) Lay the gasket P20 on both sides of the gutter, and then the roof panel with the gasket P13.
7) Install the eaves flashing on both sides with rivets.
8) Glue the PVC membrane to the entire surface of the gutter with an adhesive glue.

SKIN-PLATE Insulated Gutters

When installing prefabricated gutters with inner sheet SKIN - PLATE, we proceed as follows:

Note: Installation procedure of SKIN-PLATE gutters is different from PES or SPECTRUM coated guttrers.

1) First place the whole gutter somewhere on even surface. Mark the end of the each gutter overlap with a pencil.
2) Fit the end piece of the gutter with the bottom overlap on the substructure and measure the location of all downstream gutters according to delivered lengths as they follow each other (draw the location on the construction).
3) Place every second gutter part on the structure with the bottom sheet overlap (part one-third-fifth, etc.)
4) On the spaced elements, you marked with pencil the ends of the gutter overlaps. Apply three rows of putty* at 25, 75 and 125 mm from these marked lines. It is recommended to apply the mastic bead from above and into the lower gutter overlap.
5) The gutter parts are interconnected at the point of offset by self-tapping pan head screws (eg Drillnox Star 3.5PI TB 5.5 × 28) or closed rivets at a spacing of approx. Screws or rivets, if any, are placed at a distance of approximately 25mm from the overlapping edge of the upper sheet. If closed rivets are used, holes must be pre-drilled in the sheet.
6) After the two parts are joined together, it is necessary to clean the transverse joint from dust particles, grease or water drops (min. 200mm from the edge of the overlapping plate on both sides). Instead of overlapping the sheet, clean the butyl-aluminum tape with silver tape.
7) Unwrap the supplied 200mm width foil strips through the trays across the trays so that the film is smooth with the side down and the rough side out. Place the center of the film strip over a screw or rivet joint. The PVC foil strips are then hot-air welded on both sides with the help of Leister on the SKIN-PLATE surface of the trough sections.
8) Unwrap the supplied PVC foil strips with a width of 200 mm through the transverse joint of the gutter sections so that the foil is smooth down side and rough outer side. Place the center of the film strip over screw or rivet joint. The PVC foil strips are subsequently weld hot air on both sides with Leister on SKIN - PLATE surface of gutter parts.
9) Finally, cut the holes for the bottom downpipes of the gutter. Before fixing the downpipe to the bottom of the gutter using closed rivets it is necessary to drill holes for rivets at a spacing of approx. 25 mm, and apply the sealing flange to the socket flange * (see Fig. 5.4.2).

Detail of placement of the inflow piece into insulated gutter

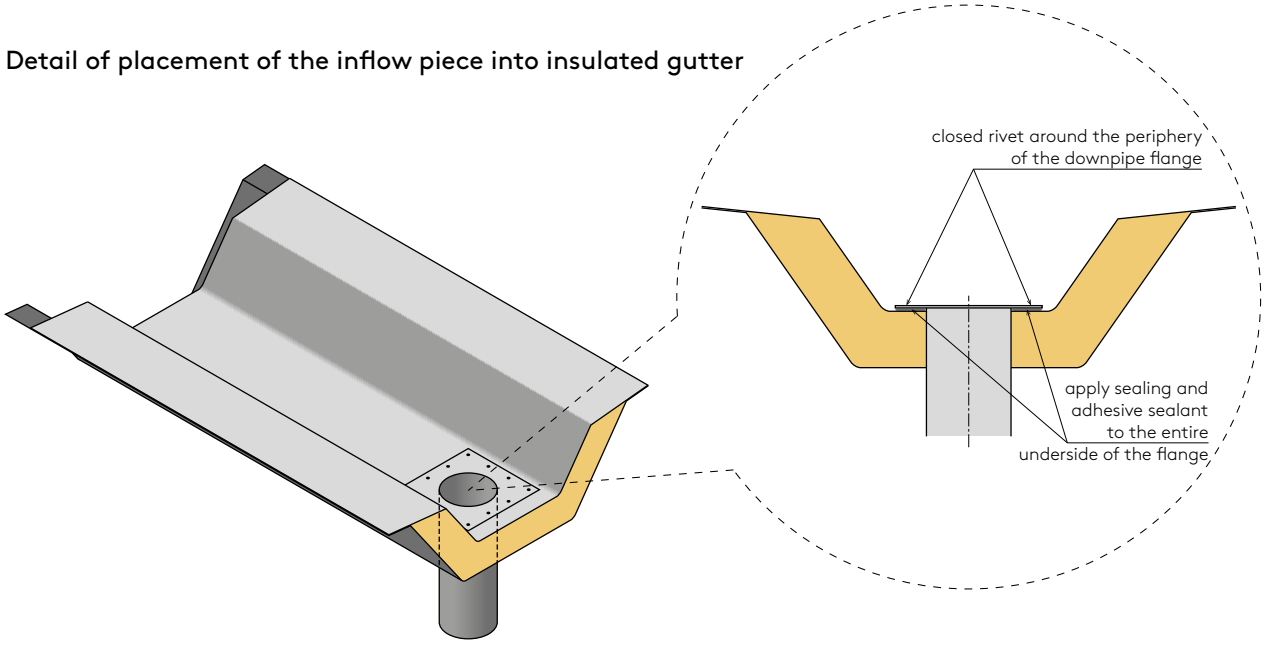

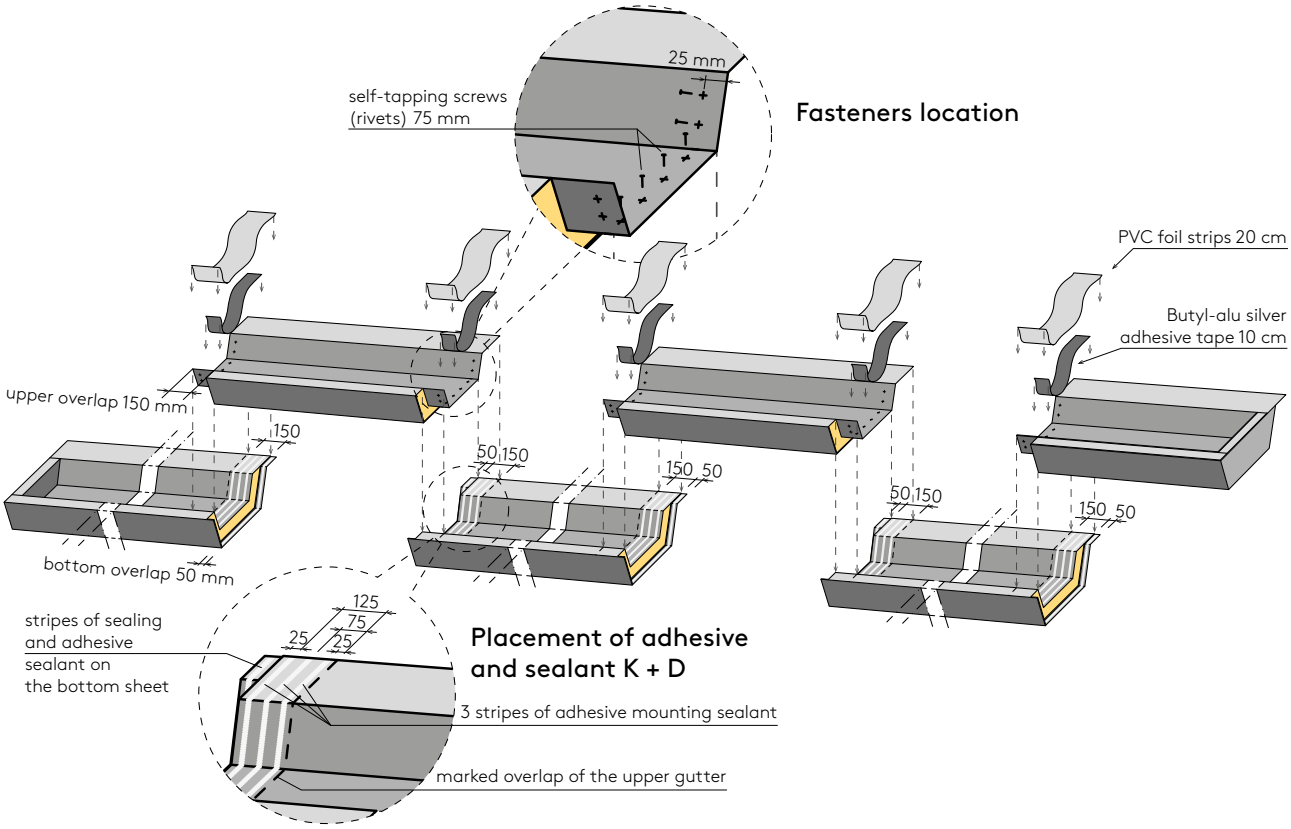

Fig. 5.4.1: installation scheme for insulated gutter with SKIN-PLATE

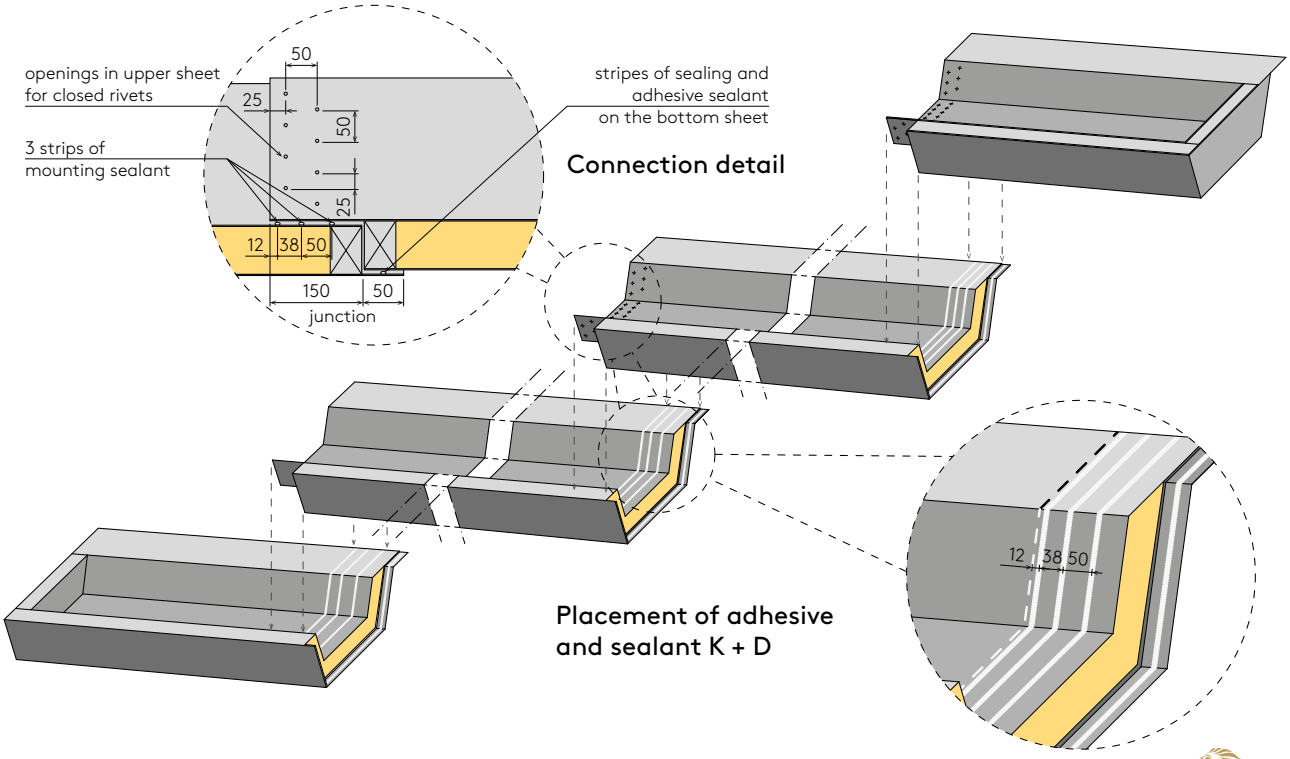

Fig. 5.4.2: installation scheme for insulated gutter with PES or SPECTRUM coating

ALUMINUM PRODUCTS

These are very impressive features that are very easy to install, feature flawless functionality and underline the originality of the building.

The starting material is aluminum sheet with final comaxit finish. This guarantees high quality and durability of the offered elements and color shade according to the customer.

Roof penetrations

Effective and practical solution of roof penetrations.
Ready-made aluminum penetrations allow for a smooth seal when applied in the roof. Optimal use of aluminum penetrations is combined with KS1000 RW and KS1000 FF panels. Unlike other roof penetration solutions, they do not require any finishing work. There are several basic types of these penetrations, which can be used for placing spotlights, RWA flaps, roof manholes, chimneys, roof windows, etc. The technical parameters depend on the type, size, location and solution of the penetration.
Roof penetrations can be supplied without insulation, but also insulated, eg for skylights. Please contact Kingspan Accessories Manufacturing Department for more information on these options.

Installation procedure

- Aluminum penetrations must always be applied in parallel with the roof panels. **They cannot be applied to already laid roof panels!** The transverse joints and the longitudinal joints of the aluminum penetrations are treated similarly to the joints of the respective roof sandwich panels.
- Before assembly, it is important to have a ready, suitably positioned structure under the panels and an already made aluminum roof penetration.

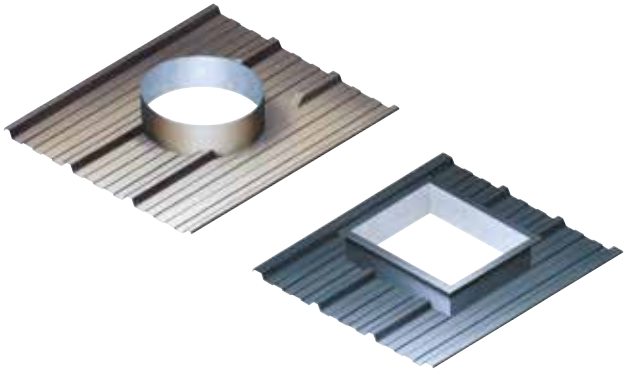

Louvers

Product innovations in the Kingspan offer - We are now adding aluminum louvers to the existing made from the materials used to make panels. The advantage is greater shape variability and the possibility of design in any color shade.
Louvers are designed to ventilate different types of objects, natural or forced (connection to ventilation).

Technical parameters

The louvers can be made after consultation in individual dimensions and shapes according to the customer's requirements, in max. Length up to 3000mm and width up to 1500mm.

Installation procedure

The procedure is based on the shape, size and location of the louvers and with regard to the load-bearing capacity of the sandwich panel into which the louvers is mounted. From this point of view it is possible to fix it directly into the panel by means of "U" profiles inserted into the pre-prepared hole in the panel, or, especially in larger louvers, into the auxiliary structure (replacement) located behind the panels so that it can also transfer any load from the technology.

Architectural elements and special constructions

The architectural features aesthetically enhance the overall appearance of the building. Original elements are always produced according to the architectural requirements of the building designer. Only the bullnose elements are standardized in a maximum length of 3000mm with a minimum of 150mm. Other elements are produced according to the approved drawing documentation.
They are characterized by their original appearance, the possibility of various architectural variants and color combinations and the high quality of the workmanship.

Installation procedure

It is different for individual elements. However, we recommend that you follow the details and instructions given to these elements in general, especially the use of fasteners and sealing elements. For more information on how to manufacture these features, contact Kingspan Accessories.

SNOW GUARDS

Snow guards (SG) are fastened through roof panels to purlins (see Fig. 72). Their spacing, count and deployment will be determined by a draughtsman on the basis of manufacturer's calculated recommendation. For designing SGs contact Kingspan's Technical Department.

Upon projecting snow guards (with holding components included) it is necessary to provide these specifications:

- type and width of the panels used
- specification of the bearing construction
- nominal snow load in kN/m^2
- roof pitch
- roof length (length of the gutter)
- roof width (from the ridge to the gutter)

Assembly procedure:

- SGs are mounted after the assembly once the roof panels have been properly fixed to the framework
- SGs are always mounted onto purlins, in one or more rows
- the first (lowest) SG row is positioned on the second purlin (first purlins are for gutters)
- the count of SGs in a row is determined by a calculation (as mentioned above), the minimum spacing, however, is the distance two neighboring trapezoidal metal sheets (for instance 333 mm for an RW panel)
- SGs are fastened with thread-cutting or self-drilling screws with sealing rubber washers, two screws per SG
- type and length of the screws to be used depend on the type and width of the roof panels and the kind of framework

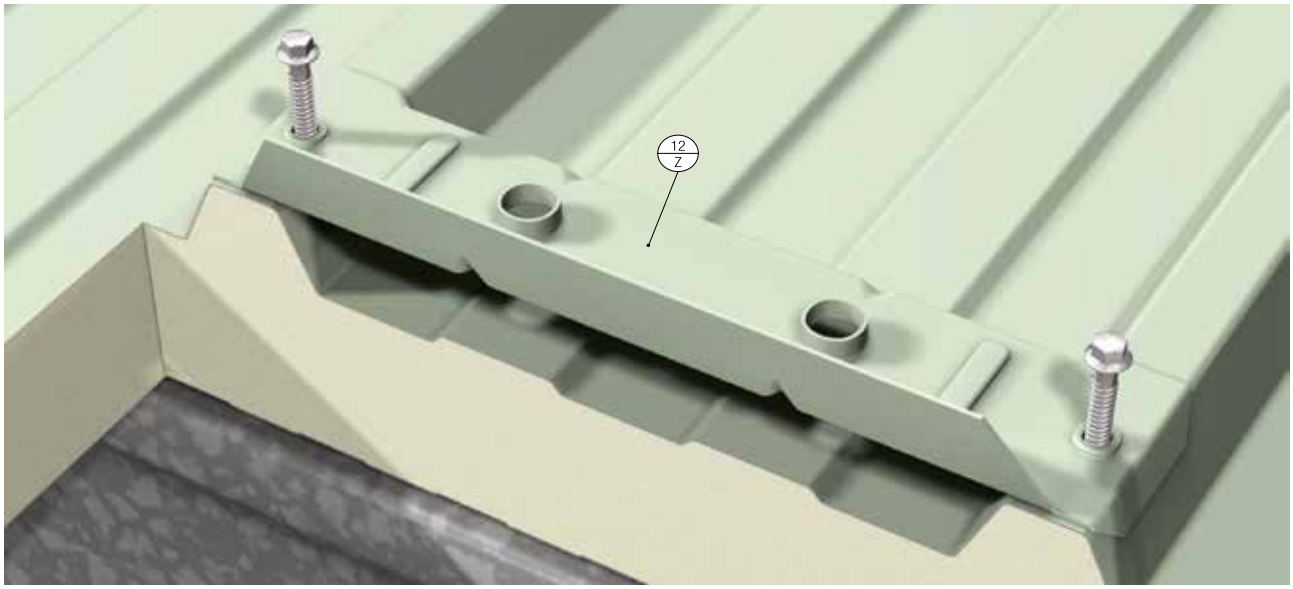

Fig. 72.: Placement of a snowguard on an RW panel

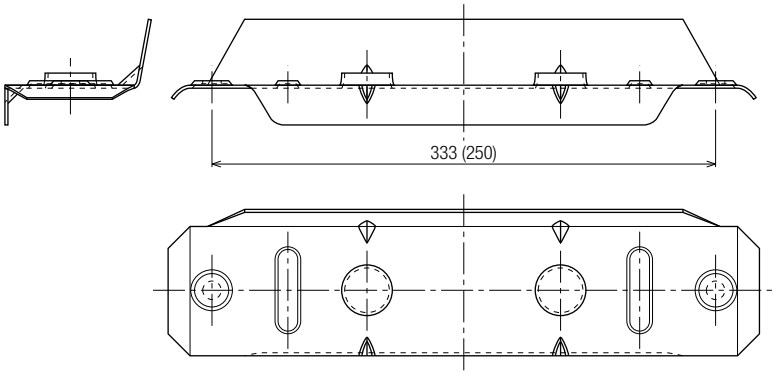

Fig. 73.: Design drawing of a snowguard

Snow gripper Z14 (aluminum element)

Snow grippers (SG) are fastened through the roof panel into purlin (see Fig. 5.6.3). Their distance, number, and place will be determined by the designer on the basis of the manufacturer's recommended calculation. For SG draft contact Kingspan Technical Department.

When designing, including fasteners, you need to enter the following data:

- type and thickness of panels used
- specification of bearing structure, distribution and number of the bottom purlins
- snow load characteristic in kN/m^2
- roof slope
- roof length (length of external gutter)
- roof width (from ridge to eave/gutter).

Installation procedure

SG is attached to the purlin through the roof panel, is required to fasten the panels in the valley so that the panel screw head does not interfere with the fastening of the SG.

- SG are installed after the roof panels are installed
- SG are always placed in place of roof purlins in one or more rows above each other.
- The first (lower) row of SG is located above the second purlin (the first purlin is the drip).
- On the underside of the SG, glue EPDM sealing tape (30×40 mm) in line of the holes for the coming fastening screws .
- SG are fastened with thread-forming or self-drilling screws with rubber sealing washers, six screws per one SG.
- The type and length of fastening screws depend on roof panel thickness and type of supporting structure.

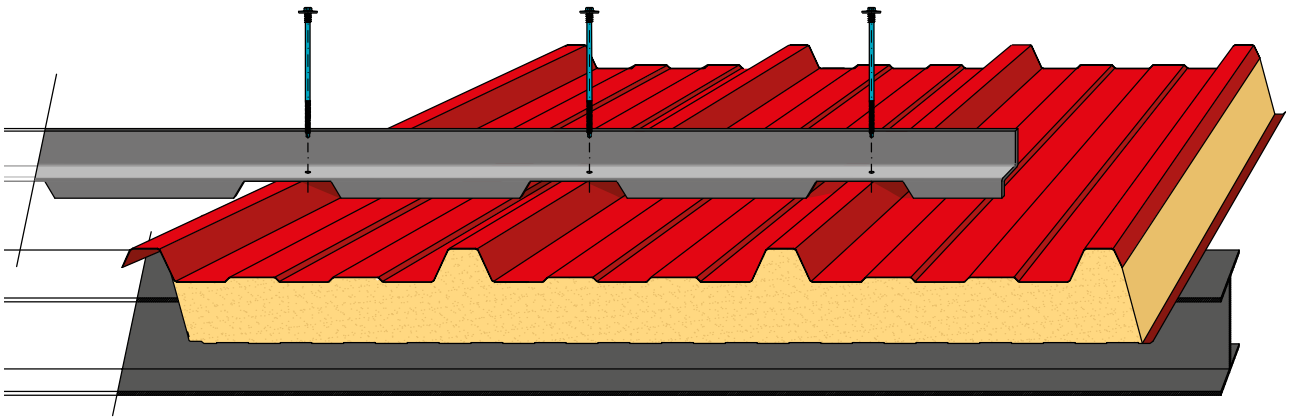

Fig. 5.6.3: Z14 drawing for KS1000 RW panel

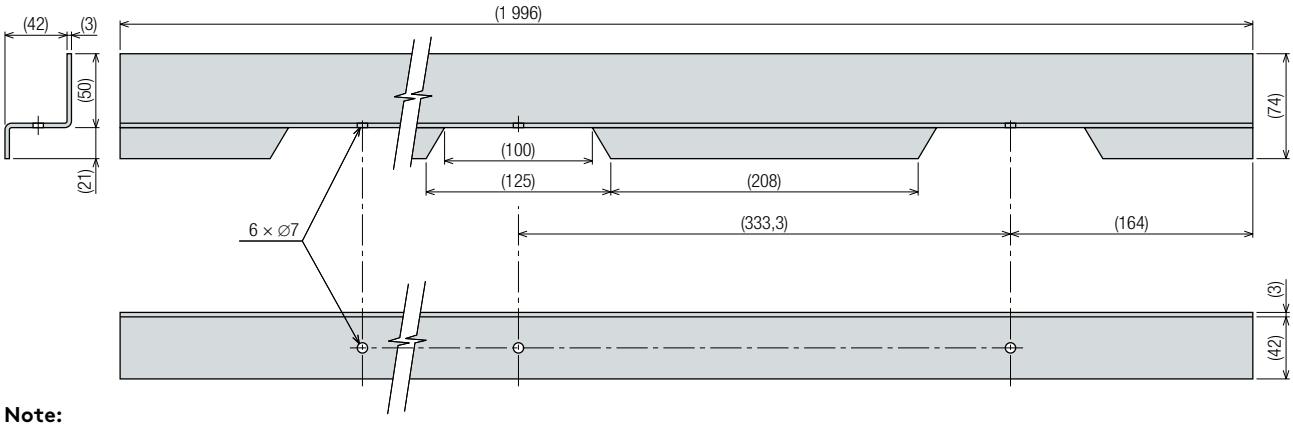

Note:

These dimensions are informative.

SG is compatible with KS1000 RW roof panel, please ask Kingspan Technical Department for other panels options.

Fig. 5.6.4: Drawing of the Z14 snow gripper

SEALANTS, TAPES AND FILLERS

Dimensions of sealing tapes are listed in the Kingspan Design & Construction Guide, section Accessories.

PE TAPES

Main Usage

- sealing against dust, air draught, noise, heat transfer and electric network failure

Application

- the surface must be dry, cleaned of dust, grease and dirt
- application temperature range +5 °C to +50 °C, also applies to surface temperatures of materials
- storage temperature range +5 °C to +25 °C
- heat resistance range –30 °C to +85 °C

Limitations

- limited UV resistance, not very good recovery, not recommended for contraction joints

PVC TAPES

Main Usage

- dust seal, windbreak, damp, noise, vibrations, heat transfer; it has excellent recovery and resistance against UV radiation. It can be also used as water packing when compressed by 30 %.

Application

- the surface must be dry, cleaned of dust, grease and dirt
- application temperature range +10 °C to +45 °C, also applies to surface temperatures of materials
- storage temperature range +5 °C to +25 °C
- heat resistance range –30 °C to +70 °C

Limitations

- it is not compatible with polycarbonate

PU TAPE – EXPANDING, PRECOMPRESSED

Main Usage

- dust seal, windbreak, noise, direct rain, water, heat transfer; it has excellent recovery and resistance against UV radiation. It can be used for contraction joints.
- For the tape to seal properly it has to be compressed to 50–30 % of its expanded width.
- (when compressed to 50 % – resistance to dust and air draught, when compressed to 30 % – resistant to open rain)

Application

- the surface must be dry, cleaned of dust, grease and mechanical dirt
- the tape is supplied in rolls in a pre-compressed state, once it has been applied (unrolled) it will fill the gaps (will freely expand up to 5 times its compressed volume)
- application temperature unrestricted, the same is true for surface temperature of materials;
- storage temperature range +1 °C to +20 °C
- heat resistance range –30 °C to +90 °C

Limitations

- at lower temperatures the expansion is slower and the tape should be moisturized with water, e.g. with a spray gun

PU TAPE

Main Usage

- dust seal, windbreak, noise, direct rain, water, heat transfer; it has excellent recovery and resistance against UV radiation. It can be used for contraction joints.
- flammability class B1, it has excellent recovery and compression 50 %

Application

- the surface must be dry, free of dust, grease and mechanic impurities
- application temperature range –30 °C to +50 °C, also applies to surface temperatures of materials
- heat resistance range –40 °C to +100 °C

BUTYL TAPE

Main Usage

- gluing and vapor-proof sealing of plastic films, sheet metal etc.

Application

- the surface must be dry, cleaned of dust, grease and dirt
- application temperature range +10 °C to +40 °C
- storage temperature range +5 °C to +25 °C
- heat resistance range –40 °C to +90 °C

Limitations

- no UV resistance, not easy to apply at extremely low or high temperatures
- worse resistance to repeated mechanical stress
- the tape must not be heated with flame or air warmer than 90 °C during application or it will be irreversibly damaged!

BUTYL TAPE

Main Usage

- excellent waterproofing and damp resistance properties, it successfully endures aging and is highly adhesive to all materials. Does not dry up.

Application

- the surface must be dry, cleaned of dust, grease and dirt
- application temperature range +5 °C to +35 °C
- storage temperature range +5 °C to +25 °C
- heat resistance range –50 °C to +80 °C

Limitations

- no UV resistance, not easy to apply at extremely low or high temperatures, worse resistance to repeated mechanical stress, the tape must not be heated with flame or air warmer than 90 °C or it will be irreversibly damaged!

NEUTRAL SILICON SEALANT

Main Usage

- Excellent long lasting elasticity, recovery and good adhesiveness in extreme outside conditions. Resistant to UV radiation, weather and aging. Meant for both interior and exterior applications. Good adhesiveness to the majority of building materials (such as glass, steel, etc.).

Application

- the surface must be dry, cleaned of dust, grease and dirt. Non-absorbent underlying layer with closed pores is to be cleaned with the cleansing preparation Perennator R 40.
- application temperature range +5 °C to +40 °C
- store in cold (not freezing) dry environment
- heat resistance range –40 °C to +150 °C
- caulking vulcanization 2 mm / 24 hours at 23 °C and 50 % air humidity

Limitations

- It is not advisable to use this sealant in combination with EPDM, APTK or neoprene. It cannot be used in insufficiently aired environments.

NEUTRAL SILICON SEALANT

Main Usage

- Suitable for sealing of glazed constructions and window sill joints. Endures aging and is resistant to a wide array of aggressive chemicals.
- Tested for usage with foods (foodsafe).

Application

- the surface must be dry, cleaned of dust, grease and dirt. Non-absorbent underlying layer with closed pores is to be cleaned with the cleansing preparation Perennator R 40.
- application temperature range +5 °C to +40 °C
- store in cold (not freezing) dry environment
- heat resistance range –40 °C to +180 °C
- vulcanization of the sealant 2 mm / 24 hrs, at the temperature of 23 °C, air humidity 50 %

Limitations

- It cannot be used in insufficiently aired environments.

PU FOAMS

Main Usage

- Suitable for assembly of peripheral fillings and doors as well as for sealing joints. It serves as a heat and noise proofing material with gluing properties.
- Excellent adhesiveness to concrete, masonry, facades, rock, wood, fiber concrete, metal and plastic (polystyrene, PU hard foam, polyester, hard PVC).

Application

- The surface must be dry, cleaned of dust, grease and dirt. If needed moisturize the surface before applying the foam.
- The container must be at least 20 times properly shaken before using it. Then remove the stopper and replace it with the provided application nozzle.
- When filling joints larger than 5 cm the PU foam should be applied in multiple layers.
- store in cold (not freezing) dry environment
- heat resistance range –40 °C to +90 °C

Limitations

- no UV resistance, it is not advised to use it for vapor-proof constructions

ADHESIVE AND CONSTRUCTION PUR BASED SEALING

Main Usage

- wooden and steel constructions ABS, GFK, polycarbonate, hard PVC, glass

Application

- the surface must be dry, cleaned of dust, grease and dirt. Adhesiveness may be increased by using the Primer preparation by the Würth company
- application temperature range +5 °C to +35 °C – the optimum temperature range +15 °C to +25 °C (for the sealing material)
- storage temperature range +10 °C to +25 °C
- heat resistance range –40 °C to +90 °C

Limitations

- not suitable for polyethylene, polypropylene, silicon, Teflon, and soft plastic materials

PES TAPE – PRECOMPRESSED

Main Usage

- dust seal, windbreak, water, rain, noise, heat transfer; it has excellent recovery and resistance against UV radiation. Resistant to mildews and bacteria. It can be used for contraction joints. (at compression to 20 % resistant to minor leakage, 50 % resistant to drizzling, 70 % resistant to dust and air draught, 80 % completely water resistant)

Application

- the surface must be dry, cleaned of dust, grease and dirt. the tape is supplied in rolls in a pre-compressed state, once it has been applied (unrolled) it will fill the gaps.
- application temperature range +5 °C to +25 °C
- heat resistance range –30 °C to +85 °C

Limitations

- the insulating function of the tape is not assured under permanent action of water, the tape is not water-proof but water-repellent

BUILDING PLASTIC CEMENT BASED ON POLYBUTENE

for sealing of joints, windows and masonry, cementing of glass, and dilatation joints

Application

- the surface must be dry, cleaned of dust, grease and dirt
- application temperature range +1 °C to +30 °C
- storage temperature range +5 °C to +25 °C
- heat resistance range –20 °C to +80 °C

Limitations

- not suitable for polyethylene, polypropylene, silicon, Teflon, and soft plastic materials

ELASTIC CEMENT BASED ON POLYURETHANE

sealing and gluing of dilatation and vibration joints, sealing and gluing of metal constructions

Application

- the surface must be dry, cleaned of dust, grease and dirt
- application temperature range +1 °C to +30 °C
- storage temperature range +5 °C to +25 °C
- heat resistance range –20 °C to +80 °C

Limitations

- when painting with common oxidation paints, the drying process may be violated

TOOLS AND EQUIPMENT

Measuring Instruments: spirit level, tape measure, surveyor's level, carpenter's square, measuring string, ruler Drills (tighteners) for steel (or concrete) drilling with depth stop and reverse drive (see Fig. 74–78).

Tighteners with adjustable torque are not recommended for tightening screws that mount panels to steelwork or concrete. During drilling/thread-cutting the torque fluctuates which could lead to over-tightening or stripping of the screw and following deformation of a panel.

- Saws for cutting panels:
- Metal-cutting chainsaws (see Fig. 75)
  The kind of saw suitable for "clean cuts", that means: accurate cutting and an immediate kerf in a panel without the need for a starting cut for panels up to the width of 150mm.
- Handheld metal-cutting circular saw (see Fig. 76)
  A disk saw with a negative teeth inclination with sintered carbide plates. The saw is good for long cuts in panels of low and medium thicknesses.
- Rectilinear carving saw
  Used with metal-cutting saw blades. Good for short cuts and finishing of openings.
  Using of grinding disks is strictly forbidden! After you have finished cutting, properly clean the panels of scattered steel sawdust and remove occasional burrs on panel edges!
- Assembly and manipulation utilities
- Universal hand tools:
  screwdrivers, the Gola set, tin snips, plumbing set, riveting machine, files, rubber mallet, knife, spatula or spattle, hammer, cementing set
- Auxiliary tools
  correction varnish and cement, paintbrush, spraygun for both varnish and cement, thinner, degreasing agent, detergents, bucket, wipers, brush, wooden groundsheets, battens, planks

Fig. 74: Tools required for riveting

Fig. 75.: Handheld metal and sandwich panel cutting chainsaw for straight cuts

Fig. 76.: Handheld circular saw with a disk for cutting sandwich panels

Fig. 77.: Electric wrench with depth stop

Fig. 78.: Handheld power saw
for cutting sandwich panels

BUILDING SITE SAFETY, BUILDING AND ASSEMBLY WORKS

Safety should be an inherent part of any workplace, especially when one of the greatest risks relates to working at height. Investigations show that falls from height have accounted for 47 % of fatalities and 30 % of major injuries in construction during and this is the most common cause of injury in industries.

When working at height, work safety must be always assured. Employers, designers, building companies, employees and all personnel with any kind of control over the work being done are obligated to determine, demand and keep safety at the jobsite. At the same time they must employ safety equipment, sufficient protection and appropriate counseling to minimize or completely avoid risks at the site. Apart from securing the workers at height it is also necessary to provide sufficient protection of persons bellow and above the work being done and make sure that a proper safety distance from the said work is being kept.

Safety of the building site – Remember, ignorance of law is not an excuse!

Legislature

There are a number of regulations concerning setting up and maintaining a secure working environment. Those of which that refer to working at height are as follows:

- Before commission of work at height a complete risk assessment must be performed for every operation of an individual procedure as it conforms to the valid health and safety regulations.
- Safety regulations relating to the jobsite are perhaps the ones of greatest importance as far as health and safety of workers are concerned.
- Regulations that relate to health and safety are relevant to all projects and all participating personnel including the customers, shippers, and operating workers.

Based on these regulations the designers must:

- consider the hazards and risks which may arise for persons who are engaged in the implementation and maintenance of the project
- conduct the design in such a way so as to minimize the appearance of health and security risks, if those can be avoided
- The current building site safety regulations require that:
- there be a proper and sufficiently safe means of access to as well as an emergency exit from every particular place of the building site which is likely to be used by a worker
- appropriate and sufficient steps be taken as to prevent, so far as reasonably practicable, any person from falling by the employment of security arrangements such as personal locking and technical security

The provision of safe access and egress should encompass:

a) a guardrail, toe-board, barrier or other similar means of protection

b) a work platform

c) personal locking (safety harness, belts)

d) personal protection (helmet, protective gloves suitable for carrying of materials, protective goggles, slip-resistant footwear, appropriate work dress, and other tools in respect to actual work-related health threats present)

Moreover appropriate means of personal locking and preventive arrangements eliminating the danger of falling objects must be provided. The current regulations also include callings for ladders which, however, should not be used as entryways or exits neither should they be used as a place to work from, if this can be provided given the nature and duration of the work to be undertaken.

SAFETY REGULATIONS

During assembling of Kingspan sandwich panels a careful adherence to valid legal safety and health protection regulations during work is required.

Especially pay attention to the regulations concerning work safety in rough climate conditions.

- We suggest that the project documentation processing be given to a specialized company that has references by the panel manufacturer – Kingspan Inc.; eventually, you can consult the future use of the panels with the manufacturer.
- Hot air welding of hydro-insulation plastic film at longitudinal and transverse joints of the panels KS1000 X-DEK as well as processing of roof details (passages, skylights, attics, connections to neighboring objects, etc.) while using plastic film covered metal sheets and hydro-insulation films must be assigned to a firm accredited by the hydro-insulation plastic film manufacturer. Otherwise no warranty for the roof cladding's water resistance shall be guaranteed.
- Upon applying sealing and cementing materials it is necessary to adhere to the conditions issued by the manufacturer of these materials.
- Before applying a sealing profile on the ribs (see P12 and P13) of both a roof and a wall panel we suggest that the profile sealing be cemented on either side, with polyurethane or bitumen cementing, for instance.
- For behind-the-attic and inter-roof gutters to function properly we recommend heating during winter months.
- Fastening the roof panels by their inner sheet metal is not recommended by the Kingspan. Please discuss the options on fastening light components onto panels with the Kingspan's Technical Department.
- You are advised to follow the present regulations when installing trimming components. We recommend overlapping at joints by 200 mm (on a slanted surface) or 50 mm (other surfaces). Furthermore we suggest that this joint be cemented with appropriate cementing and then properly riveted.
- Roof panels are not generally suitable for walking.
- If panels are used as walkways or working surfaces, they should be properly protected for the time when they are used in this way. Only one maintaining person is to be allowed on a panel at once.

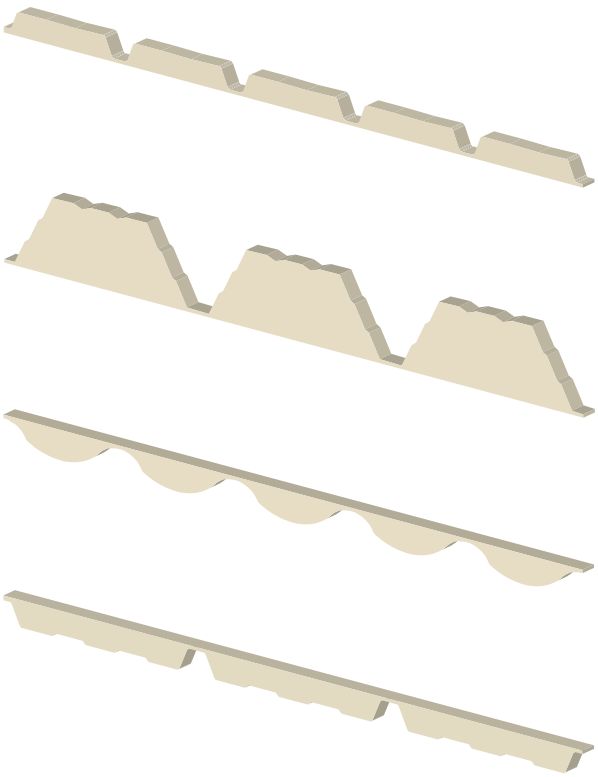

Fig. 81.: Sealing Profile of Roof Panels Between Corrugations

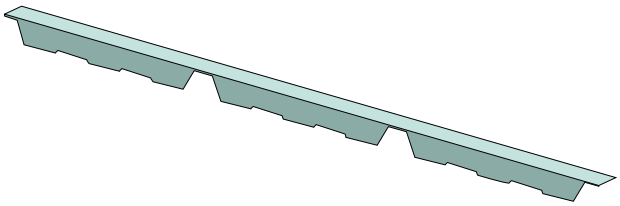

Fig. 82.: Covering Metal Plate (K102)

SAFETY INSPECTIONS

We recommend regular checkups once every year for the lifetime of the building. The items marked as "*****" should be checked immediately once the building has been finished. Changes in the surface coating should be especially monitored if the day of expected repainting of cladding approaches.
Things that should be checked:

- ***** Cleanness of gutters, clogging of gutters may lead to leakage
  Solution: clean and flush the clogged passages
- ***** Presence of impurities left after assembly works.
  Due to absorbability these impurities, when left on the surface of a panel, may cause premature local corrosion.
  Solution: remove the remnants, clean the polluted areas and check the integrity of the coating
- Accumulation of impurities where rain water washing is not sufficient. Here the impurities may cause disruptions of the coating.
  Solution: properly wash the polluted areas and check the integrity of the coating
- Growth of fungi. This only happens under extreme conditions and results in aesthetic defects.
  Solution: Clean and treat the mildew in the way described in the following chapter.
- Local deterioration of protective layers. May lead to the corrosion of steel flashing.
  Solution: determine the extent and type of damage and act as recommended in the following chapters
- ***** Presence of steel sawdust and other metallic impurities may lead to a rusty tint on the top of the panels.
  Solution: remove the metal scraps
- ***** Fixation of panels; use of inappropriate fastening screws or a faulty or imperfect fixation may lead to leakage and creation of corrosion stains
  Solution: change the faulty screws or add back the eventual missing capping.

MAINTENANCE AND FIXING OF THE CLADDING

Cleaning

A pure and clean appearance of the facade cladding is often simply maintained by rainfalls, nevertheless, once the maximum lifetime of the outer coating has been reached it is necessary to properly remove the dust and impurities which have not been washed away by rain. Doing so will minimize the risk of corrosion occurrence. We recommend that the walls be cleansed with clean water at the temperature of about 60 °C , using a soft brush.
For the removal of unyielding dirt a non-aggressive detergent, at a concentration lower than 10 %, may be used. The detergent then should be washed away with water.
For hydroblasting of the surface we recommend water not hotter than 70 °C at the maximum pressure of 35 bar being distanced from the wall by at least 20 cm. Oil and grease stains can be removed using a soft cloth impregnated with alcohol and following rinse with water.
We recommend application of protective wax on the surface.

Notice:

- do not use thinners, abrasive compounds or concentrated detergents for cleaning (adhere to the concentrations prescribed by the producer)!!!
- rinse the cleaned areas with water
- components of sealing materials, tar and the like will go away after treating with alcohol-based thinner; wash properly after doing so!
- always proceed downwards and rinse the cleaned areas with water immediately
- excessive cleansing will do more harm than good
- we suggest entrusting the works to specialized cleaning companies

Minor Repairs

It is possible to find areas with damaged surface during a safety inspection. Minor surface scratches are best off left without treatment. Should the scratches reach the base layer they are easily fixed by painting over them. It needs to be assured that the overpaint does not go beyond the damaged area. For this reason the repair should be effected very carefully, using fine brushes. In respect of the fact that the repair color may differ in shade it is important to keep the overpainted area as small as possible.

Exemplary Proceeding of a Repair Overpainting

- grease removal
- roughening the surface by a fine sandpaper
- cementing with polyester filling
- leveling to the metal sheet profiles of the panel
- painting with primer (e.g. Formex – S 2003)
- applying finishing paint by spraying or rolling

In regard to previous experience you can use, for instance, the paint commercially designated as "Seidenmatt" by the Relius Company. We suggest entrusting the works to specialized companies.

Repainting

If it is necessary to repaint, the surface preparation and painting must be performed by a specialized company.
First, the panels must be properly cleaned as herein described. The paint must be applied on a dry surface, using a brush, rolling pin, or by spraying while following the standard procedures (2 layers of primer + surface email paint). Do not use cellulose paints!

CHANGING A PANEL

If it becomes necessary to change a panel, follow the following procedure:

Roof (RW, FF, X-DEK) and Wall (NC/NF,TF,TL,RB, **RF) Panels**

- Dismantle the plumber sheeting connected with the panels designated for removal.
- For horizontally laid panels proceed as follows:
- oosen the second panel from the top
- loosen, secure (e.g. using suspension ropes) and remove the first panel (from above)
- go on by loosening second and then first panels
- In this way the whole column can be disassembled until the desired panel is reached.
- For vertically laid panels proceed in the same manner; a panel in the middle of a row may be removed after releasing the two adjacent panels.
- For roof panels the dismounting process is analogous. Only the screws in longitudinal joints have to be removed first.
- Reassembling goes in the opposite direction. Before mounting a new panel it is necessary to check and possibly change the sealing tapes damaged during disassembling.

Wall Panels AWP / AWP Flex **and RH**

- Dismantle the plumber sheeting connected with the panels designated for removal.
- These panel always have to be demounted from one side towards the middle as it is impossible for panels with covered joints to remove a panel in the middle of a row.
- For horizontally laid panels proceed as follows:
- first loosen the first panel, secure it (e.g. using suspension ropes) and finally dismount
- continue in this way throughout the rest of the row
- In this way the whole column can be disassembled until the desired panel is reached.
- For vertically laid panels proceed in the same manner; a panel in the middle of a row may be removed after releasing the two adjacent panels.
- Reassembling goes in the opposite direction. Before mounting a new panel it is necessary to check and possibly change the sealing tapes damaged during disassembling.

Roof Panels X-DEK

- Dismantle the plumber sheeting connected with the panels designated for removal.
- These panel cannot be demounted without breaking the hydro-insulation plastic film.
- First cut the hydro-insulation plastic film at all joints around the panels to be removed as well as at the joints of the adjacent panels.
- Next unfasten the screws at longitudinal joints, which are usually fastened from the interior side.
- Then cut holes at the positions of anchoring screws and remove these screws.
- Before removing the chosen panel, it is also necessary to loosen the precedent panel that is placed on an open rib of the panel being removed.
- Reassembling goes in the opposite direction. Before mounting a new panel it is necessary to check and possibly change the sealing tapes damaged during disassembling.
- After having finished the re-assembly, it is necessary to properly clean all the hydro-insulation joints and re-weld them with new strips of the hydro-insulation plastic.
  The works should be performed by a firm accredited by the hydro-insulation plastic film's manufacturer.

Storage and manipulation instructions for roof and wall sandwich panels

Packs of panels shorter than 6 m can only be manipulated using a forklift or crane and textile strips with distance planks of lengths exceeding the panel's width by 50 mm on either side. (Fig. 1 and 6)

For packs of panels longer than 6 m, when being manipulated by a crane, a balance beam and textile strips need to be used (Fig. 2). The strips must be strutted both at the bottom and at the top with distance planks. Do not, under any circumstances, use steel ropes or chains!

Individual panel packs are not to be piled on top of each other for longer periods than necessary (Fig. 3).

In the case of longer outside storage, the panels should be covered with a textile sheet in order to prevent the action of atmospheric influences and UV radiation (Fig. 4).

In order to ensure better water drainage, the panels must be stored in gentle slope (Fig. 4).

Panels are fitted with a special bonding agent at the corners and thus prevented from sliding while being transported.

This substance can be easily removed during assembly.

When drawing panels from a stack, it is necessary that the panel be grasped at the bottom where the locks are, and not only at the top metal plate.

Disrespecting this might lead to the metal plate getting separated from the core.

Interior sides of the panels KS1000 TL/NF/NC/ RB and RF are marked black in the channels of the lengthwise side locks.

Once a pack has been opened, panels must only be dealt with one at a time (do not move, for instance, two panels one on another).

When manipulating mineral-wool-filled insulated panels longer than 7 m, assembly accessories must be used, that ensure the panel's stability is retained.

Otherwise the panel's integrity might be compromised during manipulation (metal plate gets separated from the core or the panel gets broken).

One possible technical implementation can be seen in Fig. 5.

The protection plastic film serves as a temporary damage protection during shipping and manipulation. Remove the film within four weeks after assembly and within ten weeks after the product has been delivered.

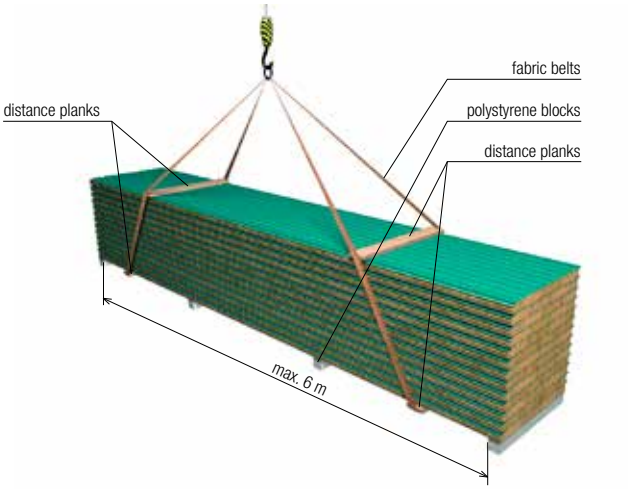

Fig. 1.

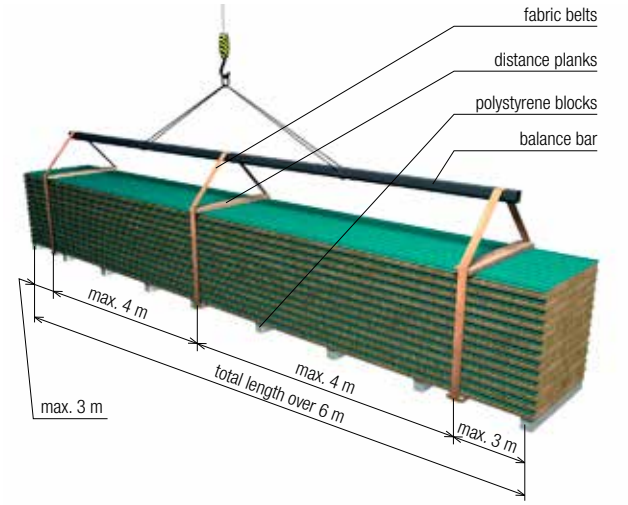

Fig. 2.

Fig. 3.

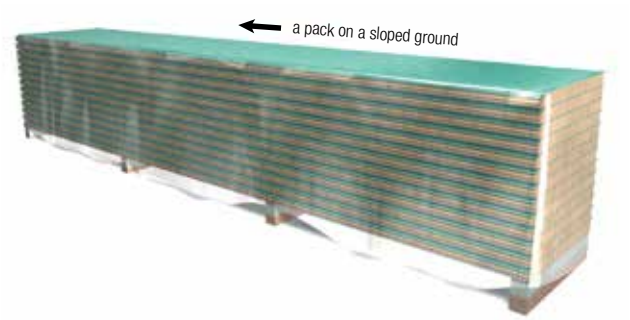

Fig. 4.

Fig. 5.

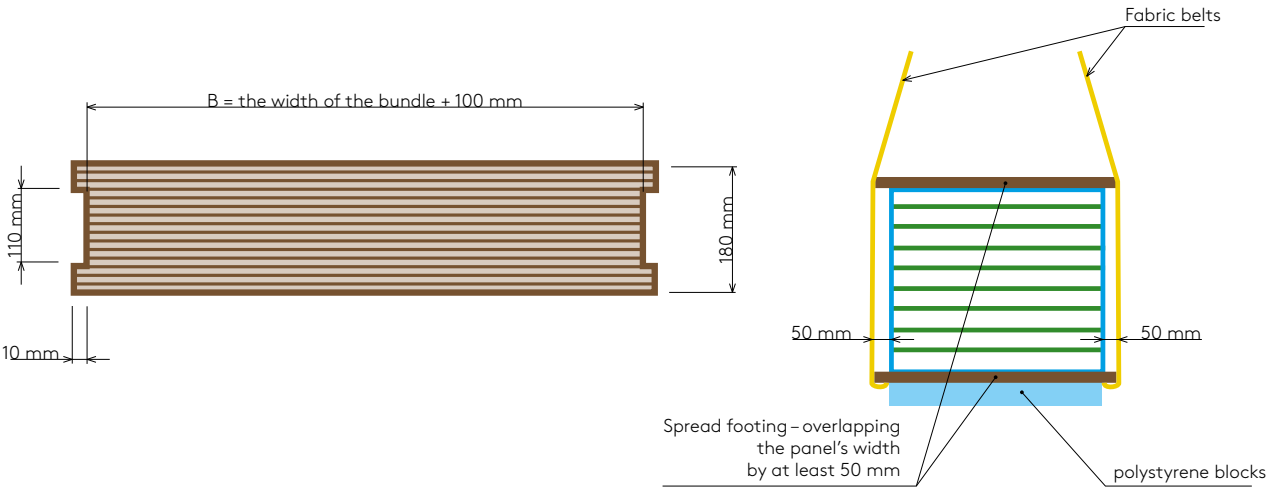

Fig. 6.

PLACEMENT OF CUTBACKS AND DETERMINING THE DIRECTION OF ASSEMBLY FOR PANELS RW, FF, ROOF LIGHTS

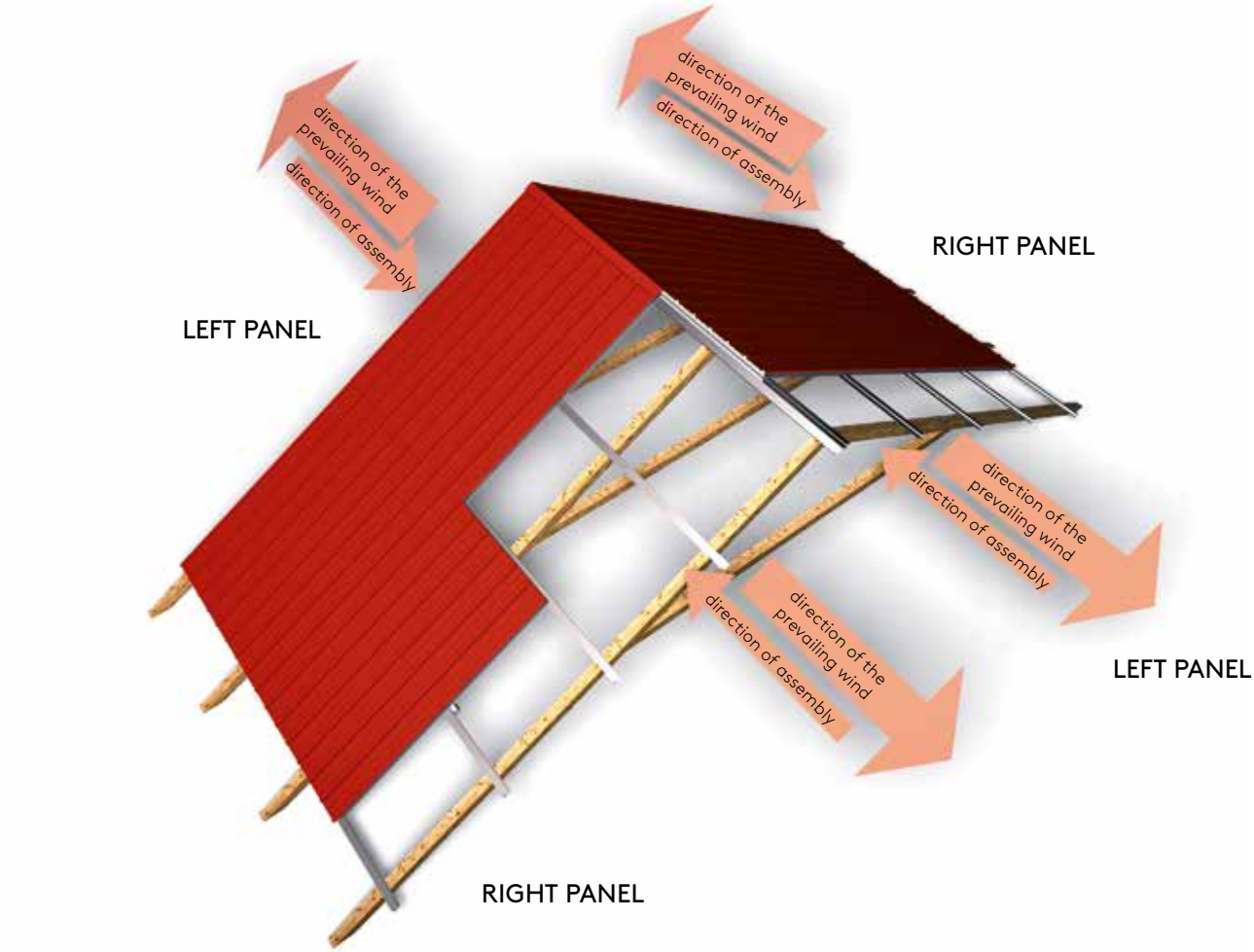

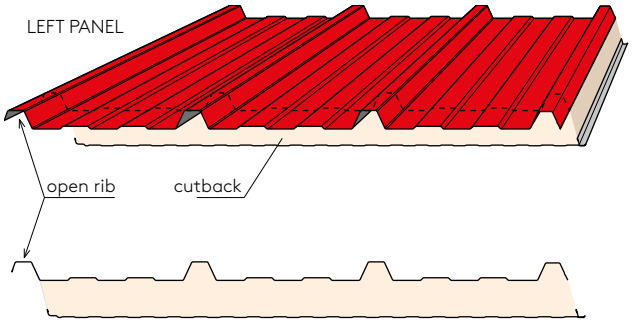

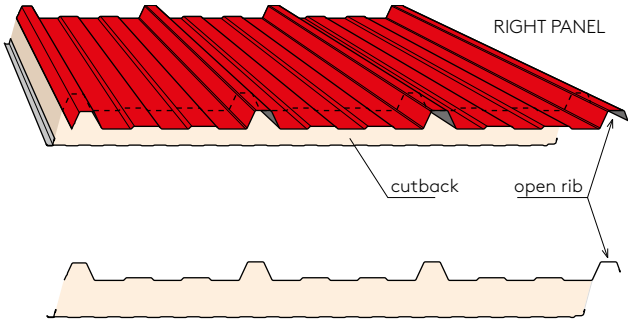

LEFT PANEL

Panel mounted with trapezoidal sheet up, cutback is rotated towards you and the open rib is on the left.The mounting direction in this case is from left to right (it is recommended to mount against the prevailing winds).

RIGHT PANEL

Panel mounted with trapezoidal sheet up, cutback is rotated towards you and the open rib is on the right. The mounting direction in this case is from right to left (it is recommended to mount against the prevailing winds).

PLACEMENT OF CUTBACKS AND DETERMINING THE DIRECTION OF ASSEMBLY FOR PANELS X-DEK

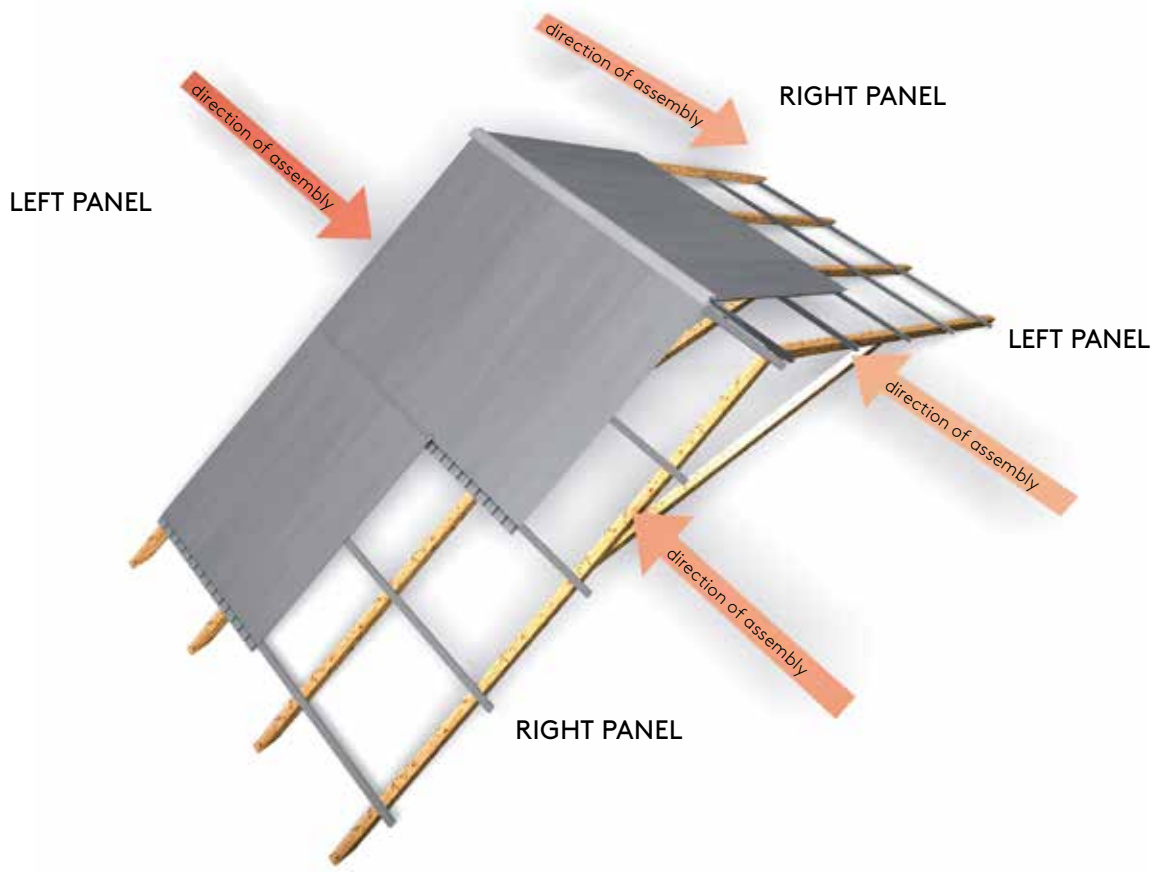

X-DEK

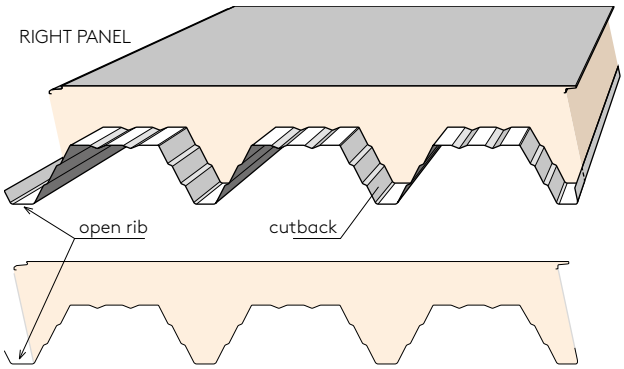

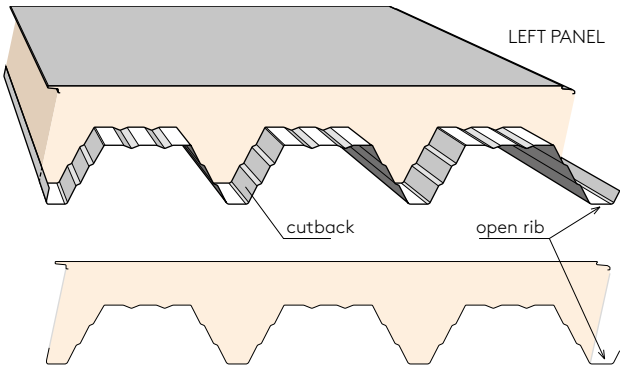

RIGHT PANEL

Panel mounted with trapezoidal sheet down, cutback is rotated towards you and the open rib is on the left.
The mounting direction in this case is from right to left.

LEFT PANEL

Panel mounted with trapezoidal sheet down, cutback is rotated towards you and the open rib is on the right side.
The mounting direction in this case is from left to right.

PLACEMENT OF CUTBACKS AND DETERMINING THE DIRECTION OF ASSEMBLY
FOR PANELS TF, TL, NF, NC, RF, AT, AWP, RH, FH

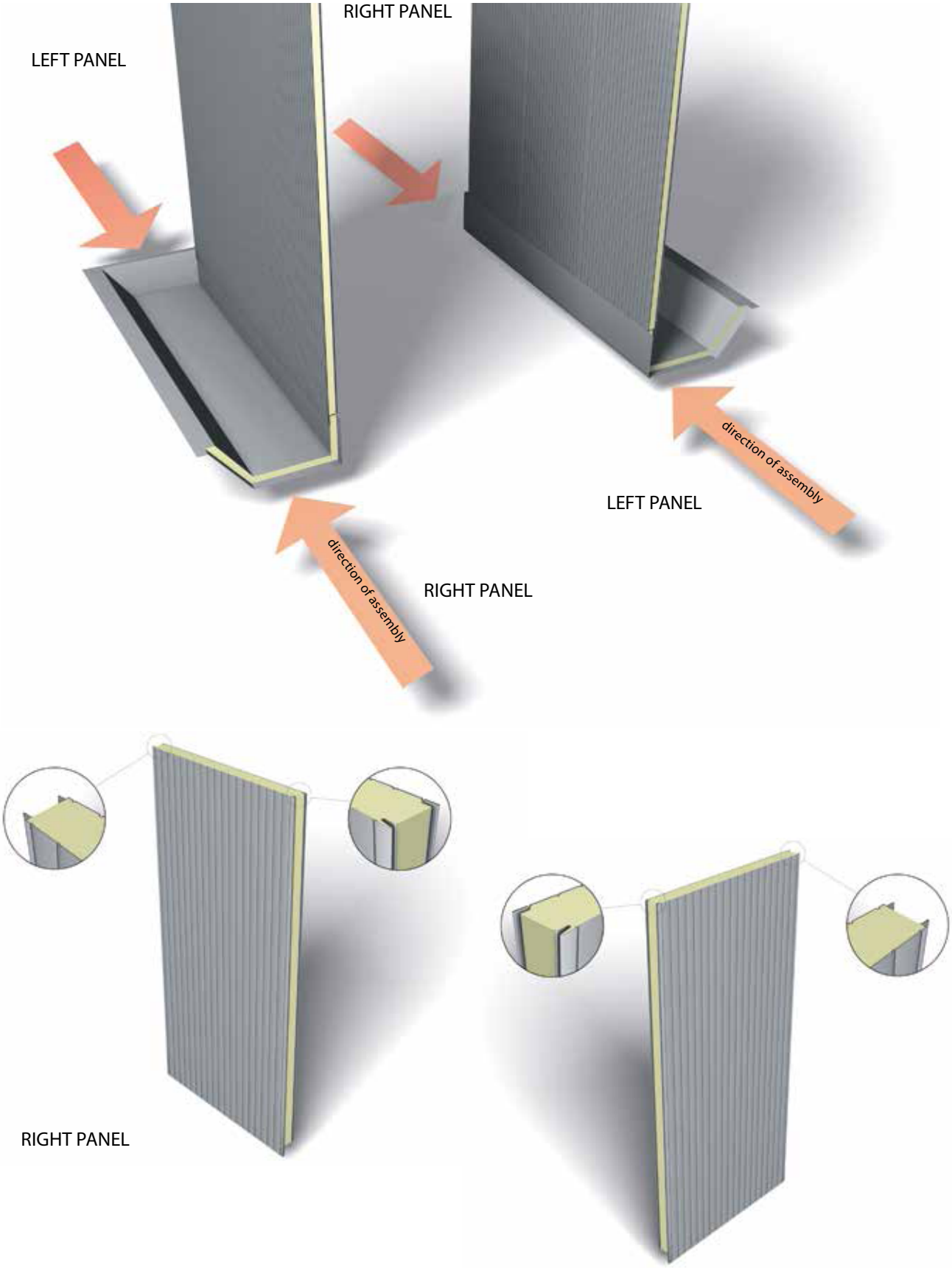

SCHEME OF ROOF PANELS' ASSEMBLY PROCEEDINGS

Care has been taken to ensure that the contents of this publication are accurate, but Kingspan Limited and its subsidiary companies do not accept responsibility for errors or for information that is found to be misleading. Suggestions for, or description of, the end use or application of products or methods of working are for information only and Kingspan Limited and its subsidiaries accept no liability in respect thereof.

Kingspan

Contact us

Poland:

Kingspan Sp. z o.o.
ul. Przemysłowa 20
27-300, Lipsko
Tel.: +48 48 378 31 00
info@kingspan.pl
www.kingspan.pl

Estonia:

Kingspan OÜ
Mustamäe tee 55
10621 Tallinn
Tel (+372) 6516661
info@kingspan.ee
www.kingspan.ee

Latvia:

Kingspan Latvia
Kronvalda bulv. 3 -1
LV-1010 Riga
Tel:+371 28393 333
info@kingspan.lv
www.kingspan.lv

Lithuania:

UAB Kingspan
Neries kr. 16
LT-48402, Kaunas
Tel: +370 37 451 883
info@kingspan.lt
www.kingspan.lt

Denmark:

Kingspan A/S
Mercurvej 12A
DK - 9530 Støvring
Tel: +45 7021 7788
info@kingspan.dk
www.kingspan.dk

Finland:

Kingspan Oy
Nuijamiestentie 5 A
00400 Helsinki
Tel.: +358 9 878 6080
info@kingspan.fi
www.kingspan.fi

Norway:

Kingspan AS
Grålumveien 125
712 Grålum, Norge
Tel.: +47 69 14 44 00
info@kingspan.no
www.kingspan.no

Sweden:

Kingspan AB
Prytzgatan 6
431 31 Mölndal
Tel. +46 (0)31 760 26 99
info@kingspan.se
www.kingspan.se

For the product offering in other markets
please contact your local sales representative
or visit www.kingspan.com

01/2024 v.2