Insulated Panels
CEME Division

KS X-Dek™ XM QuadCore® Roof Panel

Product Data Sheet

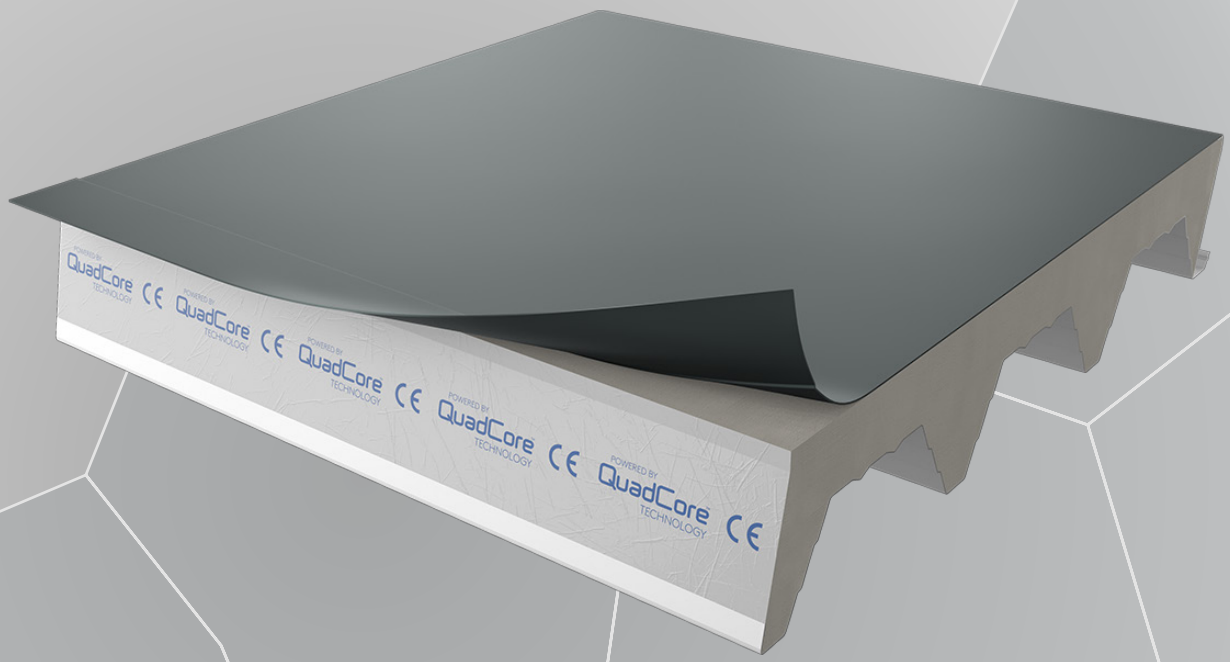

POWERED BY QuadCore® TECHNOLOGY

Kingspan®

Application

The X-Dek™ flat roof sandwich panel system is a combination of a supporting structure, a high-quality thermal insulation core, and external metal reinforcement in one product. Its design allows for a variety of subsequent waterproofing and fixing methods that can be chosen as desired.

Panel Cross Section

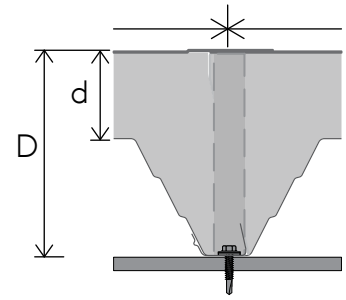

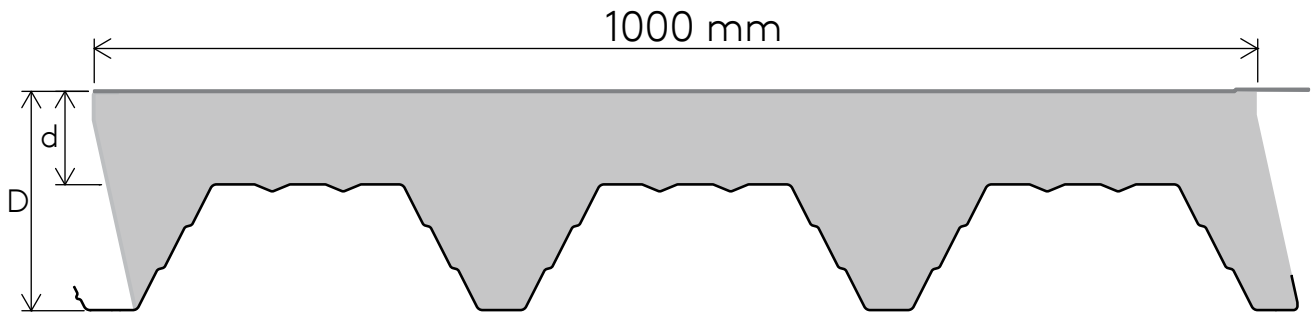

Technical Parameters

KS X-Dek™ XM QuadCore® Roof Panel has been tested and approved to comply with Hungarian National Assessment A-127/2015.

Module width/Cover width [mm]	Core Thickness [mm]	Mass [kg/m²]	Thermal Transmittance (U-value) acc. EN 14509:2013 [W/m²·K]	Airborne Sound Insulation $R_w(C;C_{tr})$	Weighted Sound Absorption Coefficient [α_w]
1,000/1,000	80	14.9	0.21	24 (-2; -3) dB	NPD
	100	15.62	0.17	24 (-2; -3) dB	NPD

The technical data is valid for a face thickness of Ext / Int. 1.20mm / 0.90 mm and a module width of 1000 mm.

Fire Performance

KS X-Dek™ XM Roof Panel has been tested and approved to comply with A-127/2015 Hungarian National Technical Assessment issued by ÉMI, and it is classified as Broof(t1) according to EN13501-5 standard.

Product technical specifications relating to fire classification are available from Kingspan Technical Support.

Module width/Cover width [mm]	Core Thickness [mm]	Reaction to Fire	Fire Resistance - Roof
1,000/1,000	80	B-s2, d0	NPD
	100	B-s2, d0	• RE 15/REI 15 - 4.5m • REI 15 - 4.5m

[1] See details in the relevant classification reports and/or in technical documentation available on request.
[3] Class is not defined in standard EN 13501-2 for this application, but the product meets its criteria.

Dimensions

Length

Shorter lengths (non-standard) [mm]	500-2999

Standard lengths [mm]	3000-16000
Longer lengths (non-standard)	

Additional costs and transport restrictions may apply for non-

standard lengths.

Width

Available panel width: 1,000 mm

Product Tolerances

Product tolerances are measured according to the standard EN 14509:2013.

Length tolerance	L≤3m, -	5 mm
Length tolerance	L≤3m, +	5 mm
Length tolerance	L>3m, -	10 mm
Length tolerance	L>3m, +	10 mm
Cover width tolerance	-	2 mm
Cover width tolerance	+	2 mm
Thickness tolerance	-	2 mm
Thickness tolerance	+	2 mm
Thickness tolerance	D>100mm, -	2 %
Thickness tolerance	D>100mm, +	2 %
Deviation from squareness		0.006 x w
Deviation from straightness (on length)		1mm/m, maximum 5 mm/m

Materials

Insulation Core

QuadCore® Technology insulation core with a Thermal Conductivity (λ) of 0.019 W/mK according to MSZ EN 12667:2001 and A-127/2015 Hungarian National Technical Assessment issued by ÉMI.

External facing

The standard thicknesses of the coil coated steel sheet is 1.20 mm.

On request also other steel sheet thicknesses are available.

Standard coating: flexible membrane

Internal facing

The standard thicknesses of the coil coated steel sheet are 0.90 mm.

On request also other steel sheet thicknesses are available.

Standard coating: PEI15.

Seals

Factory applied side joint seals. All side joints have a factory applied seal fitted into the groove to automatically seal the joint between panels.

Panels intended for external walls are usually delivered with an on the production line installed sealant in internal and external grooves.

Panels for high or vertically installed facades always have to be provided with sealant in both grooves of the joint.

Profiles

The available profiles can be found in the corresponding profile table.

Colours

The available colours can be found in the "Colour Guide" brochure.

Mechanical Resistance

For load / span tables, please contact Kingspan Technical Support.

Environmental Performance

Facilities located in Ujhartyan generate renewable energy onsite which contributes to that sites energy mix.

Kingspan Insulated Panels source steel with 15-25% recycled content.

Kingspan Insulated Panels directly contribute to BREEAM® and LEED® credits.

Quality

Kingspan Insulated Panels are manufactured from the highest quality materials, using state of the art production equipment to rigorous quality control standards, complying with ISO 9001:2015 Quality management systems standards as well as ISO 37301:2021 Compliance management systems standards, ensuring long term reliability and service life.

The panels are also being manufactured under Environmental management system certification EN ISO 14001:2015, Energy management system certification EN ISO 50001:2018 and Occupational health and safety certification EN ISO 45001:2018.

Packing

Standard Packing - Road Transportation

Kingspan Insulated Panels are stacked weather side to weather side. The top, bottom, sides and ends are protected with foam and timber packing and the entire palette is wrapped with protection film.

The number of panels in a pack depends on panel thickness and length. Quantities are reduced for exceptionally long panels.

Core Thickness [mm]	80	100
Number of Panels	8	6

Delivery

All deliveries are by road transport to a project site unless otherwise indicated. Unloading is the responsibility of the customer.

Sea Freight

Full timber crate packs are available at extra cost for projects requiring sea freight delivery. Alternatively steel containers can be used. Special loading charges apply.

Site Storage & Installation

For site storage and installation instructions please refer to the respective brochure or contact Kingspan Technical Support.

Warranty

Kingspan warranties are assessed individually for each project, depending in particular on the aggressiveness of the environment and the type of surface treatment chosen.

Profiles

Profile	External	Internal
F - Flat		
V - Trapez profiling X-Dek		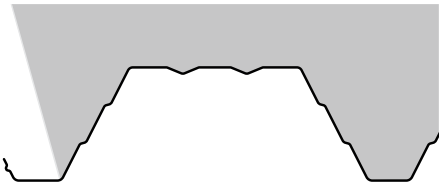

Contact Details

Kingspan Insulated Panels
Manufacturing plant
Horka dűlő 1.
Újhartyán
2367
Email: info@kingspan.hu

Scan the QR code or click here for the latest version of the document.

The information provided in this datasheet is accurate as of its date of publication and represents our commitment to quality and transparency. However, Kingspan Insulated Panels reserve the right to modify product specifications without prior notice to reflect advancements or improvements. For applications not explicitly covered within this datasheet, consultation with our Technical Advisory Service is strongly advised to ensure the product meets your specific requirements. Users are responsible for verifying the product's suitability for their particular needs and for ensuring compliance with all applicable laws and regulations. For the most up to date and comprehensive product details, always refer to the latest version of this datasheet by scanning the QR code above. We reserve the right to update this datasheet, and any other informational materials, at our discretion and without notice. For the latest information, please visit: www.kingspan.hu .

Issue : 09/11/2026