Kingspan Insulated panels
CEME Division
—
06/2026

Accessories

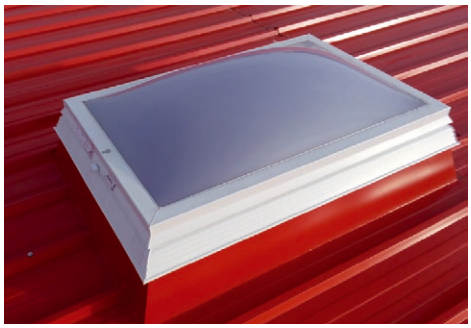



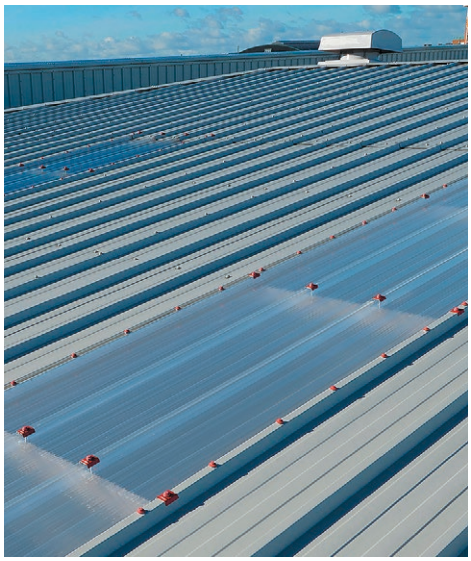





POWERED BY QuadCore™ TECHNOLOGY

Kingspan®



Kingspan

WE ARE PLANET PASSIONATE

Planet Passionate

Our global environmental sustainability programme

At Kingspan, our mission is to speed up the transition to net-zero buildings. We are pursuing this mission through our global environmental sustainability programme, which sets ambitious goals across four key areas: carbon, energy, circularity and water.

CARBON

We are reducing greenhouse gas emissions and lowering the carbon intensity of key raw materials.

ENERGY

We are increasing the share of energy we consume from renewable sources and improving the energy efficiency of our facilities.

CIRCULARITY

We support the use of recycled and renewable materials and aim for zero waste to landfill.

WATER

We conserve water resources by collecting rainwater and we support partnerships focused on restoring aquatic ecosystems.

We believe that innovative materials, building systems and digital technologies are key to addressing global challenges. Through partnerships and our innovation strategy, we support the transition towards a future built on the efficient use of resources and renewable energy.

BE PLANET PASSIONATE

Learn more about our Planet Passionate programme by scanning the QR code.

Contents

Introduction	1.01
Flashing components	**2.02**
Vertical cover profiles	2.04
Metal sheets and coils	2.05
Sealing collars	**3.06**
Drainage systems	**4.07**
External gutter system	4.08
Internal drainage system – valley and parapet gutters	4.11
Louvres	**5.13**
Standard louvres	5.13
Aluminium louvres (non-standard)	5.14
Corner panels	**6.15**
Photovoltaic solutions	**7.17**
PowerWall Karrier	7.17
PoweRail RW	7.19
Daylighting solutions	**8.21**
KS PC 20 and KS PC 40 Rooflight Panel	8.21
KS HTL Rooflight Panel	8.23
Wall-Lite Panel	8.25
Kingspan Day-Lite Klick	8.28
Solatube® Tubular Daylighting	8.30
Rooflights	8.31
Active ventilation louvres	**9.32**
Kingspan Eura Excellent	9.32
Built-in Roof Windows	**10.34**
Fire protection mechanisms	**11.35**
SHEVS - Smoke and Heat Exhaust Ventilation System	11.35
Aluminium products	**12.36**
Roof Upstands	12.37
Plastic window for SW panels	**13.38**
Kingspan Day-Lite P Window	13.38
Plastic door for SW panel	**13.39**
Kingspan Day-Lite P Door	13.39
Seals and infill materials	**14.40**
Pressed galvanized profiles	**15.41**
Fall Protection Systems	**16.42**
Fall Protection Systems – Roof safety features	
Roof anchors for panels and trapezoidal sheets	17.44
Fixings	**18.45**
Snowking	**19.46**

Kingspan manufactures a wide range of accessories that can be designed to highlight a building's architectural features. All accessories are fully compatible with our insulated roof and wall systems offering a complete solution for the building envelope.

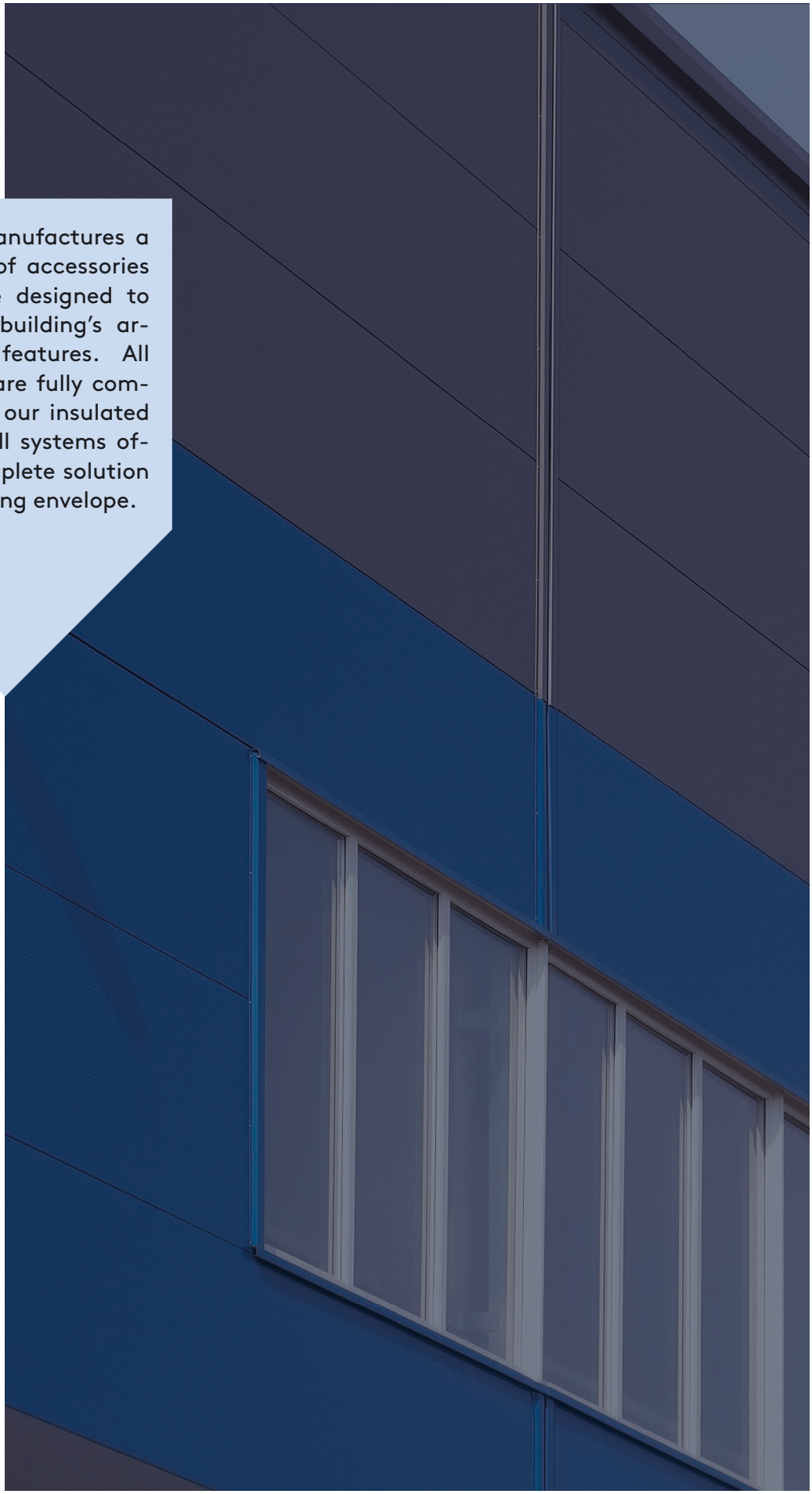

Introduction

Our extensive range of accessories includes square and half-round gutter systems, insulated gutter systems, louvres, daylighting panels, and a wide selection of standard and custom-made flashing components and insulated panel systems.

If necessary, we can supply the required amount of metal sheets in the appropriate length and surface type. The availability of an extensive range of accessories is a major advantage for consultants and installation companies, enabling them to provide investors with a complete package of products that meet the highest quality and offer the warranties required by building contractors.

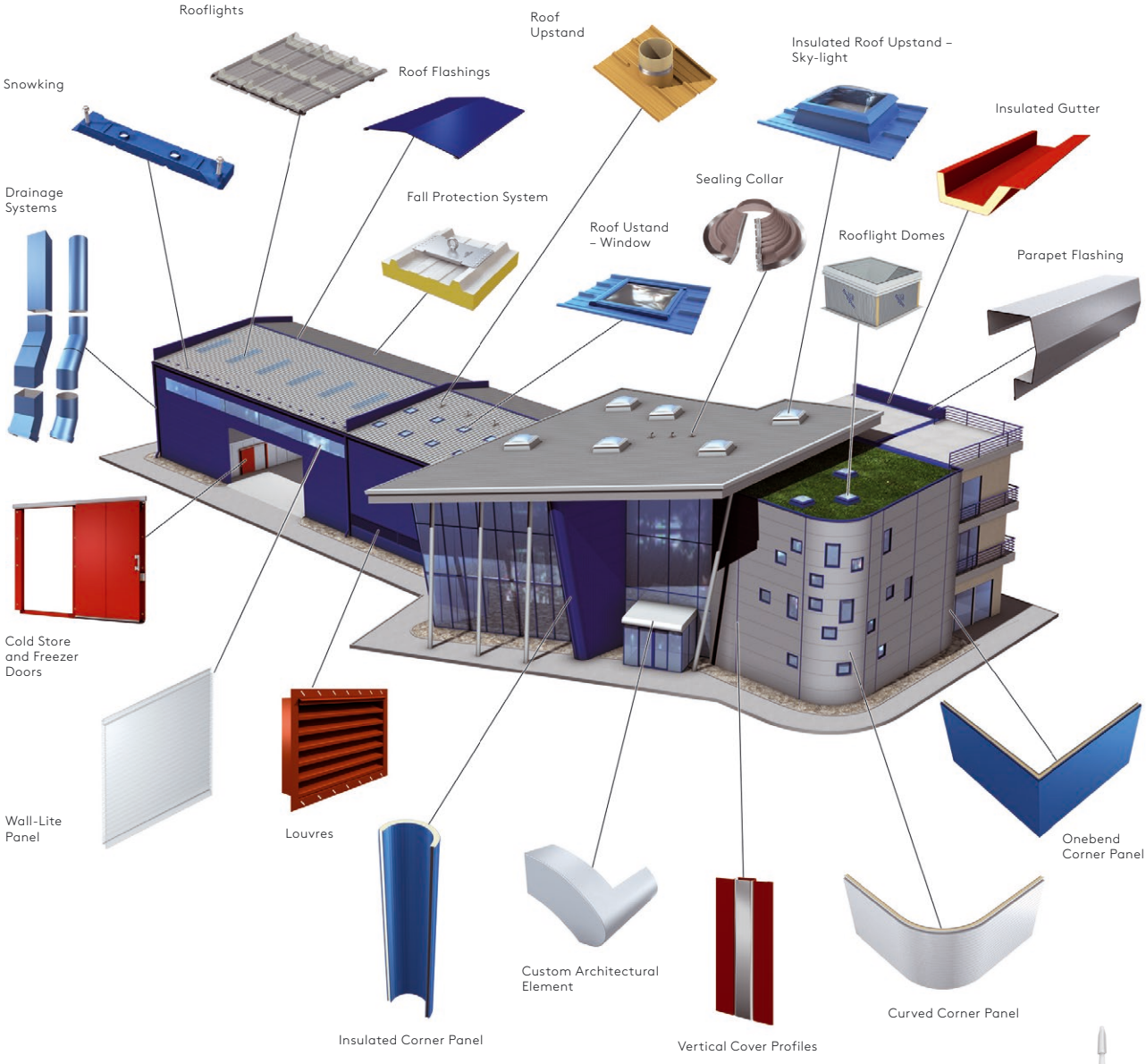


Fixing Materials

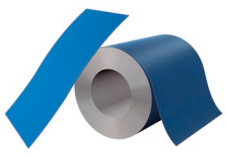
Coated Sheets and Coils

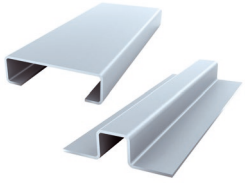
Press-Formed Galvanized Profiles


Profile Seals and Infills

Flashing components

Flashing components for completing Kingspan roof and wall systems are manufactured from surface-treated galvanized steel sheet, with a maximum width of 1,250 mm and a length of up to 8,000 mm (the recommended length for flashing components is up to 6,000 mm). For dark colours, we recommend consulting us if the required length exceeds 3,000 mm.

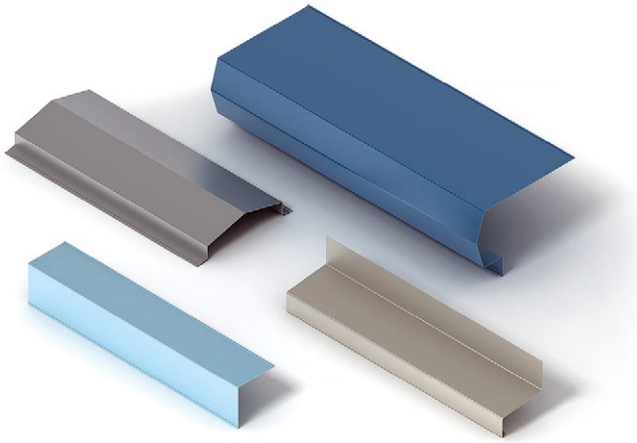

Roof flashing components

- ridge flashings
- expansion joints
- roof-light flashings
- roof panel-to-wall junctions
- roof panel-to-panel wall junctions
- verge flashings
- parapet flashings
- gutter flashings

Wall flashing components

- corner and internal corner flashings
- panel joint cover profiles
- panel-to-adjacent-building wall junctions
- plinth flashings

Roof-to-wall junction flashing components

- verge
- parapet
- gutter details

Opening flashings

- window, door and gate flashings
- louvre flashings

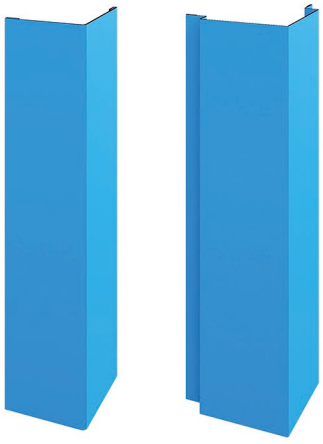

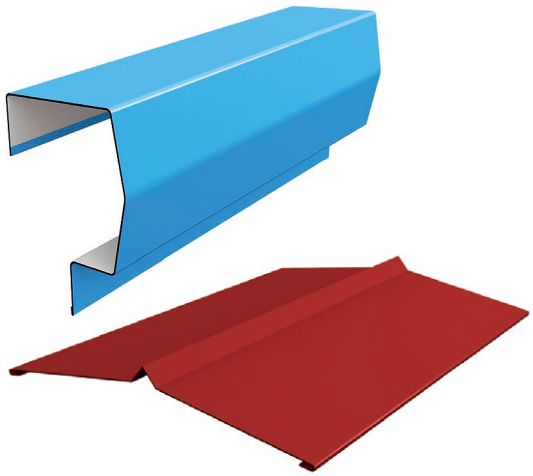

Flashing components

Material specification

Base material

- **Coated galvanised steel sheet** with a maximum width of 1,250 mm (fully unfolded).

Sheet thickness

For standard colours, a thickness of 0.6 mm is supplied.

Other thicknesses can be supplied depending to the supplier's production capabilities (0.5 mm, 0.6 mm, 0.75 mm and 1 mm galvanised steel sheet).

External surface coating

- **PES / polyester 25**
  Highly durable 25 µm coating with medium-term durability.
- **PVF2 (PVDF)**
  Highly durable 25 µm thick coating with excellent colour stability.
- **Kingspan Spectrum™**
  50 µm semi-gloss polyurethane coating with a lightly textured finish, offering excellent durability and weather resistance. Its high flexibility provides excellent resistance to mechanical damage.
- **Plastic-coated sheet**
  Suitable for roof flashings and insulated gutters.

Internal surface coating

- **Polyester coating**

Colours and surface coatings

Standard colours are available according to the Kingspan colour chart.

For special colours subject to an additional charge, please contact us.

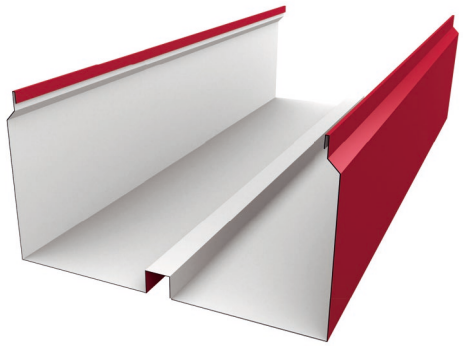

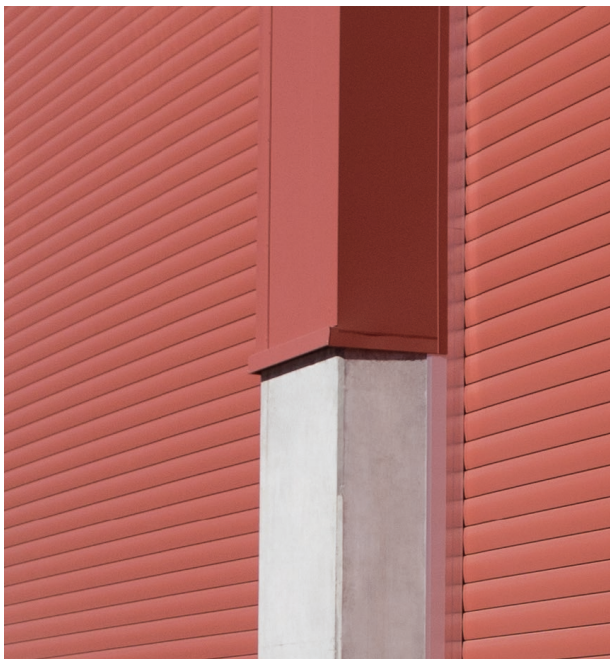



Vertical cover profiles

Vertical cover strips are used to cover the transverse joints between horizontally installed panels.

The maximum length is 8 m.

Materials

Coated galvanised steel

Steel thickness: For standard Kingspan colours, a thickness of 0.6 mm is supplied.

Standard external coatings

- **PES/ polyester 25**
  Highly durable 25 µm coating with medium-term durability.
- **Kingspan Spectrum™**
  50 µm semi-gloss polyurethane coating with a lightly textured finish, offering excellent durability and weather resistance. Its high flexibility provides excellent resistance to mechanical damage.
- **Pvf2 (PVDF)**
  Highly durable 25 µm thick coating with excellent colour stability.
- **FOODSAFE**
  This 150 µm polymer coating is non-toxic, mould-resistant, durable and easy to clean. It is chemically inert and safe for permanent contact with unpackaged food. Steel thickness: 0.5 mm.
- **Stainless steel**
  0.5 mm thick stainless steel.

Most common types of cover profiles

K150

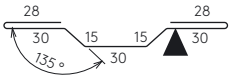

K170



K191

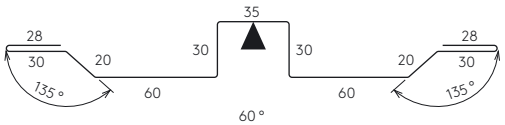

K222

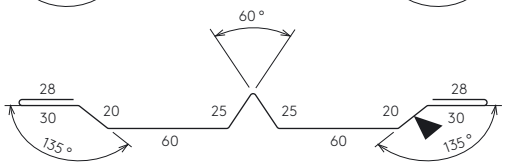

K175A + K175ACAP

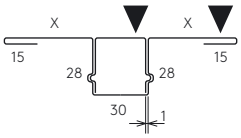

For other types of standard flashings, visit koin.kingspan.info/cz.
For non-standard dimensions and shapes, please contact the technical department.





Metal sheets and coils



Metal sheets cutting

The Accessories division supplies sheet metal sheets cut to size using its own equipment. Sheets can be supplied from almost the entire range of steel sheets used to manufacture Kingspan sandwich panels. Sheet lengths can be customised to meet customer requirements. The maximum recommended sheet length is 6,000 mm. Sheet width is determined by the developed width of the sheet and ranges from 1,058 to 1,250 mm.

Sheet thickness ranges from 0.5 to 0.75 mm.

The sheets are fitted with a protective film on the exterior side. The sheets are shipped on wooden pallets.

Metal sheet coil deliveries

- Accessories department is expanding their product range to include sheet metal coil deliveries.
- Recoiling performed using our own equipment.
- We offer sheet metal coils in standard running metres according to customer requirements (maximum coil weight: 2 t).
- The coil width is determined by the available coil development width and ranges from 1,058 to 1,250 mm.
- Sheet thickness ranges from 0.5 to 0.75 mm.
- Sheet colours with PES coating are available in accordance with current standards.
- Other sheet finishes and colours are available from our current range.
- The coil is fitted with a protective film on the exterior side.

Rewinder

- for 0.6 mm sheet thickness: max. 350 linear metres
- for 0.75 mm sheet thickness: max. 250 linear metres





Sealing collars

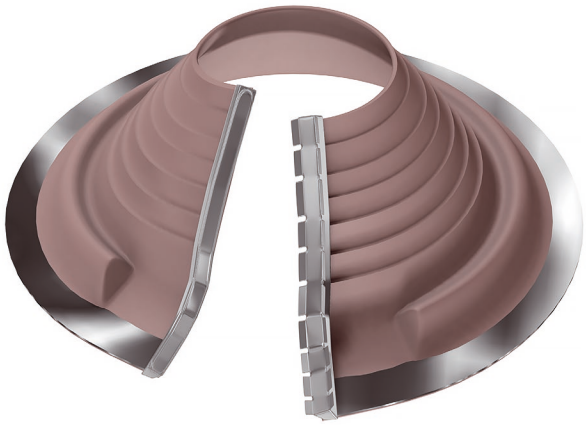

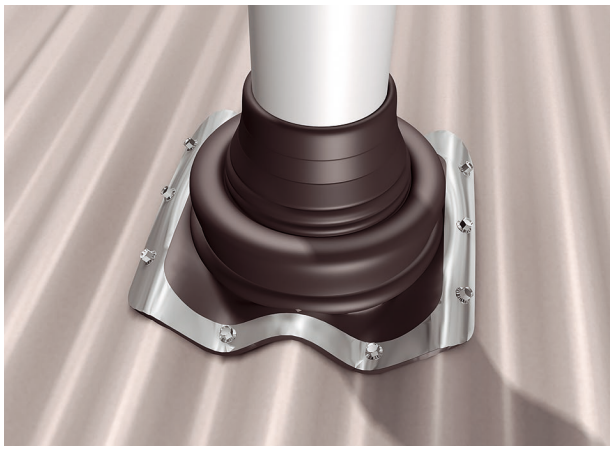

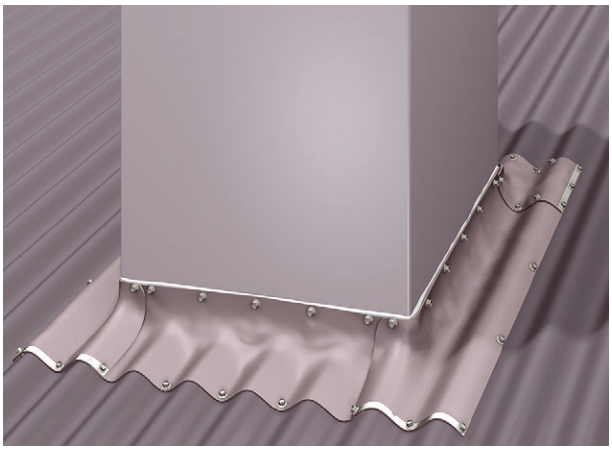

Properties

- Flexible profiled collar designed to accommodate thermal expansion and contraction of pipes.
- Free flow of rainwater.
- Suitable for difficult-to-access areas.
- Sealing of both circular and square cross-sections.

Most commonly used types of collars

- Dektite Square
- Dektite EZi-Seal
- Dektite Retrofit
- Dektite Strip Flash

Other types are available upon request.

Advantages

- Excellent sealing of pipework on roofs and walls.
- The use of collars prevents fatigue cracking, which is common in flexible pipe systems.
- The large base area ensures optimal positioning of the collar, making installation quick and reliable.
- The profile and pipe are sealed in a single operation.
- Easy to connect, ideal for repairing existing pipe systems.

Drainage systems

The drainage of rainwater from the roof into the sewer system is an important part of the roofing system. Kingspan offers an external gutter system for both mono-pitched and pitched roofs. We also offer solutions for internal roof drainage. Our Technical Department can provide a drainage system design for your building upon request. External gutters are available in both uninsulated and insulated versions, in a wide range of colours. A key advantage is their quick and easy installation on site.

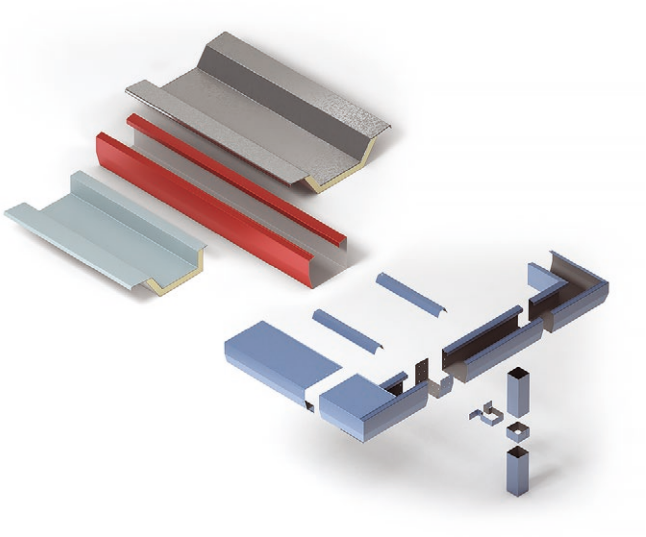

Drainage system features

- colour matching with the building envelope
- quick and easy installation
- attractive design
- insulation properties comparable to panels of the same thickness
- maximum length of 7.5 m



Roof drainage systems

- Kingspan eaves gutter system (square profile) – level
- eaves gutter system (half-round profile)
- Kingspan insulated level prefabricated system
  - valley gutter
  - parapet gutter
  - Maximum insulation thickness of the insulated gutter is 120 mm; other thicknesses available by agreement with the Technical Department.



External gutter system

The drainage of rainwater from the roof into the sewer system is an important part of the roofing system. Kingspan offers an external gutter system with square or half-round profiles for mono-pitched and gable roofs without parapets.

Level square-profile eaves gutters

Kingspan level external gutters are manufactured from 0.6 mm thick galvanized steel sheet with a single-sided coating (PES / 25 µm polyester or Spectrum 50), in lengths of up to 6,000 mm.

- gutter capacity (standard profile) = 11.8 l/s
- outlet capacity (Ø 100 mm) = 4.7 l/s
- outlet capacity (Ø 150 mm) = 9.1 l/s
- maximum spacing between outlets = 15.0 m
- outlets with a diameter of Ø 150 mm can also be supplied

System components

- eaves gutter (gutter connectors)
- square or round rainwater downpipes
- gutter supports
- gutter outlet
- downpipe clamps
- eaves bends and outlet accessories
  - rivets
  - screws
  - caps
  - adhesive
  - fixing plugs



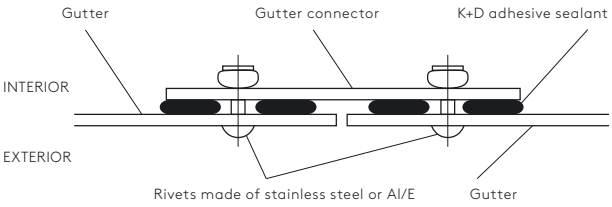

Gutter joint detail

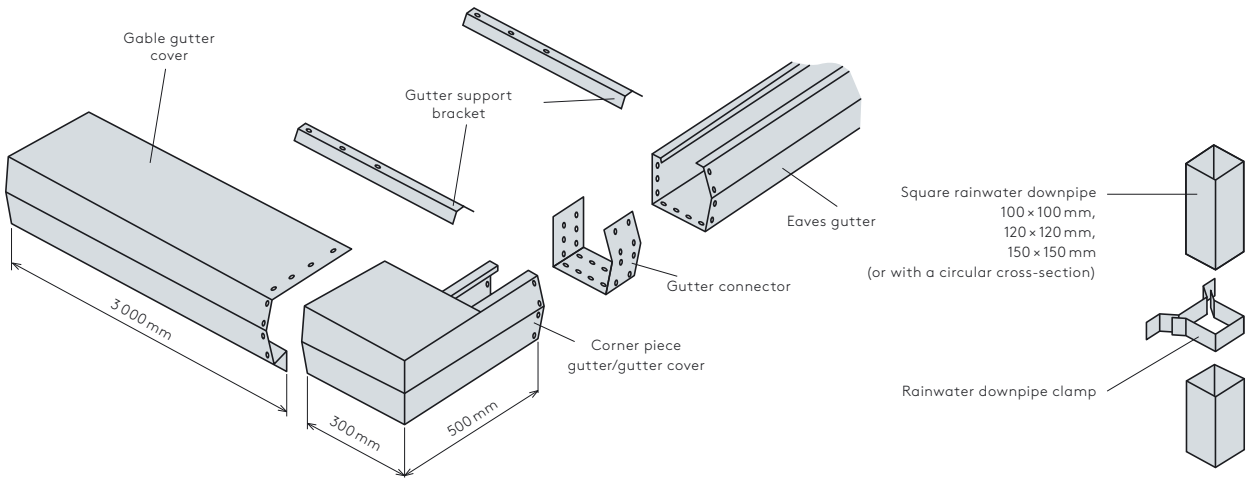

The gutter support bracket is supplied as standard in the roof colour.

External gutter system



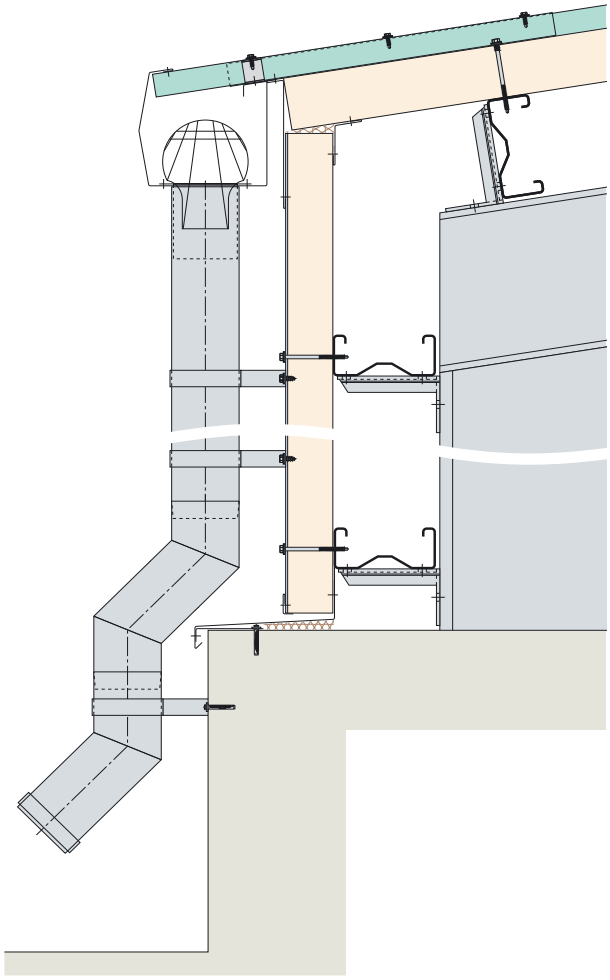

The design and specification of the system require the roof panel type, panel thickness and roof pitch to be determined.

The number and diameter of outlets must be determined based on the roof drainage area.

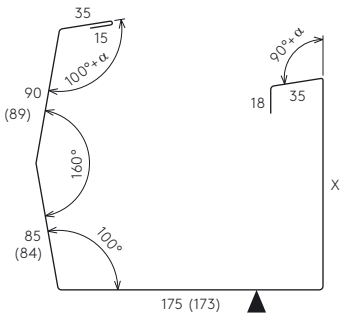

Gutter K126
for KS RW and KS FF K-Roc® Roof Panels

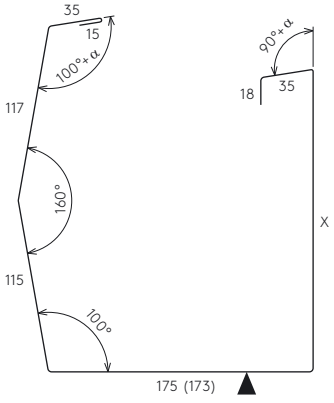

Gutter K126
or KS RW Roof Panels with a thickness of ≥160 mm

External gutter system

Semi-circular eaves gutters

Semi-circular eaves gutters are manufactured as standard from 0.6 mm thick galvanized steel sheet with a single-sided PES/polyester coating, 25 µm thick. The inner side of the sheets is coated with a protective polyester coating. To specify the system, the size of the eaves gutter, including accessories, must be determined. Please contact the Kingspan technical department.

Both the circular gutter and circular downpipe can be supplied in lengths of up to 4 metres.

System components

- eaves gutter, Ø 120–240 mm
- circular rainwater downpipe, Ø 80–150 mm
- gutter bracket for Ø 120–240 mm
- front-fixing gutter bracket for Ø 120–240 mm
- downpipe clamp for Ø 80–150 mm
- conical outlet, 330 mm or 400 mm developed width, or expansion outlet
- swan-neck and discharge bend for Ø 80–150 mm
- external or internal corner, 330 mm or 400 mm developed width
- accessories
  - bolts
  - nuts, washers and domed washers
  - caps
  - rivets
  - adhesive

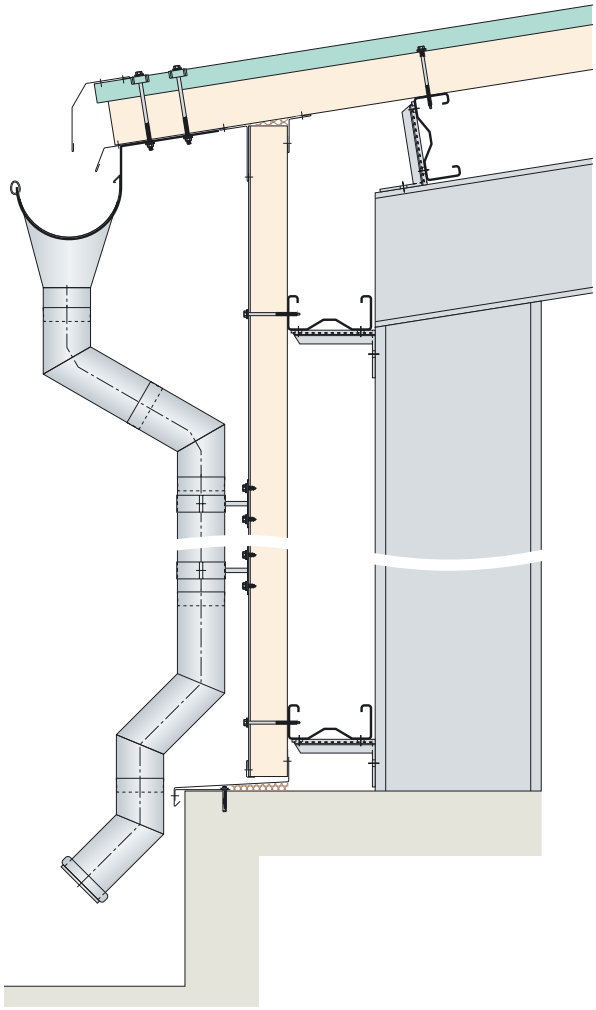

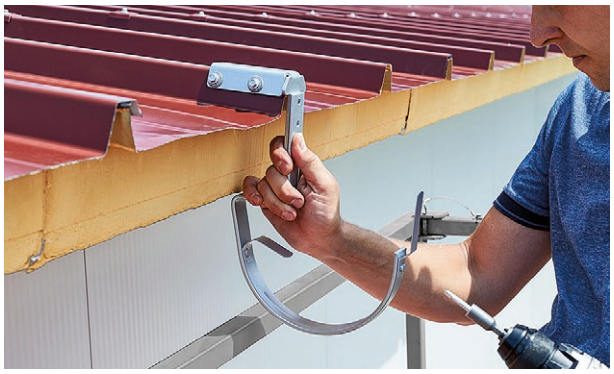

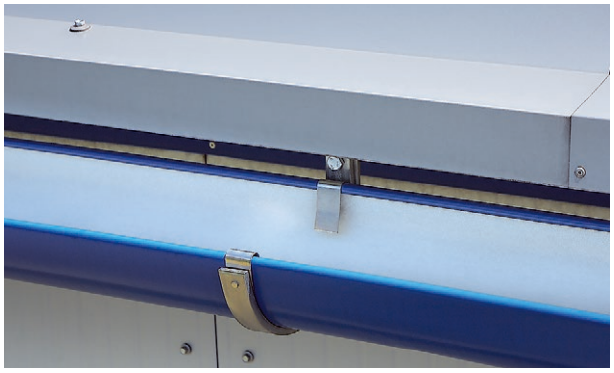



Internal drainage system – valley and parapet gutters

For mono-pitch or pitched roofs with parapet walls, a drainage system connected to the internal rainwater drainage system must be designed. For this solution, Kingspan offers an internal drainage system using prefabricated, insulated, level valley and parapet gutters.

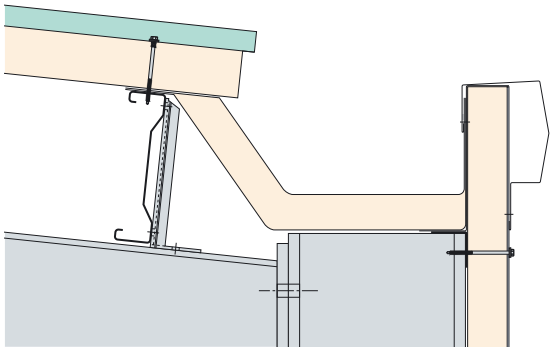

Parapet gutter

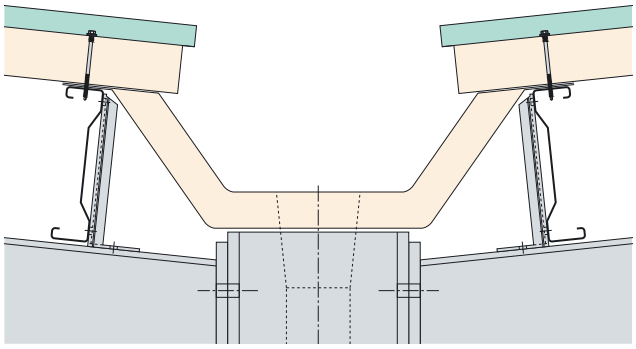

Valley gutter

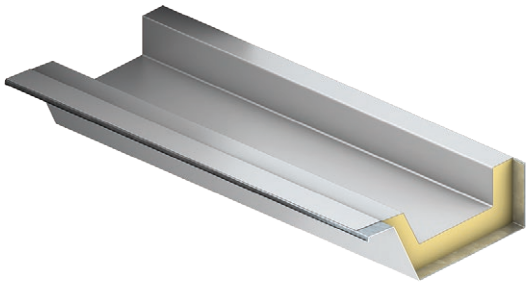

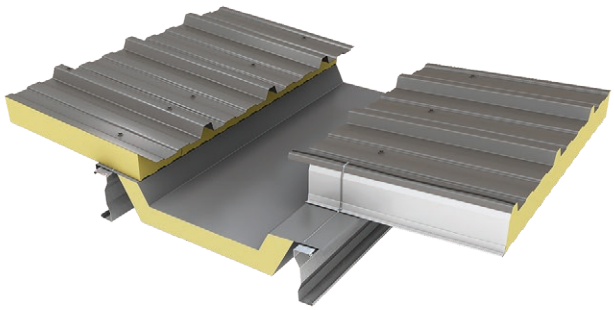



Internal drainage system – valley and parapet gutters

Kingspan insulated gutters are manufactured from 0.6 mm thick galvanised steel sheet with a surface coating (PES/polyester 25 µm or Spectrum 50) in standard Kingspan colours. SIKA plastic-coated sheet (0.6 mm thick) can be used as the external sheet. The thermal insulation consists of rigid polyurethane or mineral wool. PUR insulation is available in thicknesses from 40 to 160 mm, while mineral fibre insulation is available in thicknesses from 60 to 120 mm. When designing the roof structure, the gutter dimensions must be taken into account to ensure that it can be installed in the roof structure without difficulty, both in terms of height and length.

The standard range of valley and parapet gutters is complemented by standard end caps or a gutter end cap with an overflow (see the following figure).

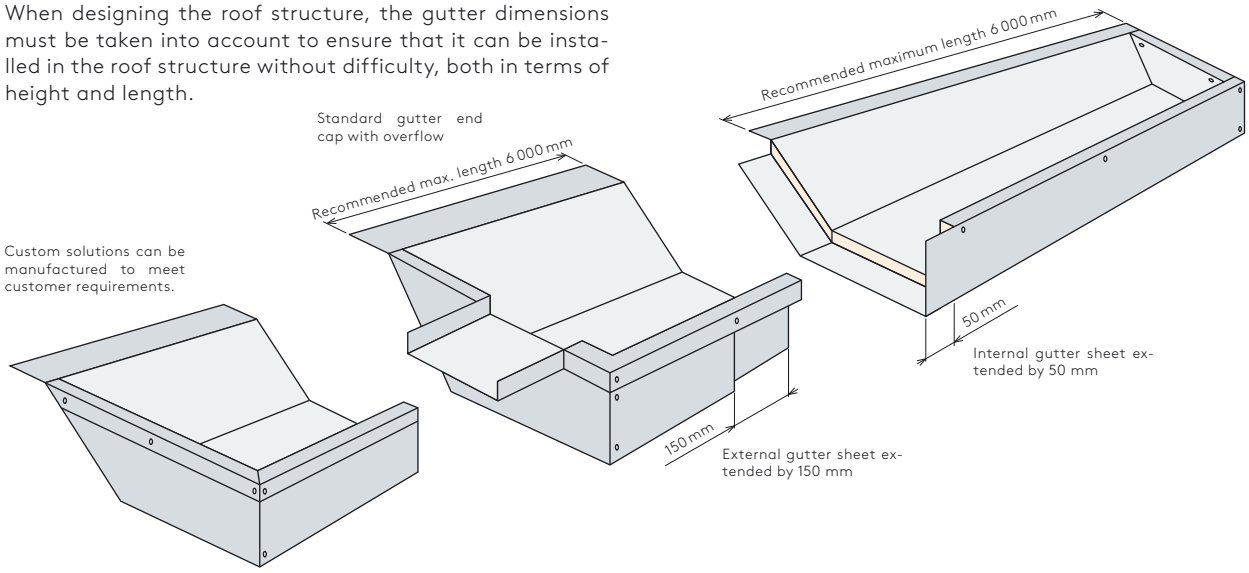

When designing an internal gutter, make sure that vertical rainwater downpipes do not cross horizontal load-bearing components of the roof structure (beams, bracing, purlins, etc.). Kingspan recommends the use of electric gutter heating.

The gutters are not self-supporting, so the steel structure must be adapted to accommodate them, or gutter brackets must be used. The gutter capacity must be consulted with the Kingspan design department.

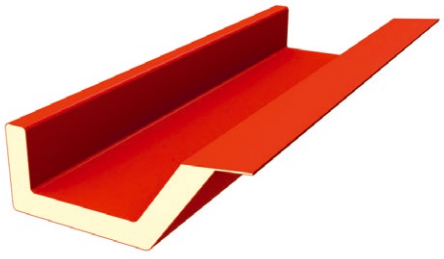

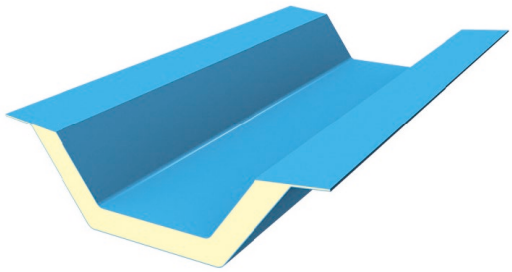

Louvres
Standard louvres

Ventilation louvres are designed to provide natural or mechanical ventilation of various types of buildings (connected to a ventilation system). Kingspan offers ventilation louvres as an accessory to its insulated panel systems.

Standard louvres

The louvres are made from bent steel sheets riveted to the frame on both sides (front and rear). An insect screen can be supplied as an optional accessory (not included as standard).



Characteristics

- colour options matching the colour of the wall/roof
- standard height: 1,000 mm
- standard width: 500 to 3,000 mm
- standard depth: 100 mm
- louvres with other profiles, louvre spacing, sizes and shapes can be supplied to meet customer requirements

Material specification

- the frame and louvres are made from galvanised steel sheets
- standard sheet thickness: 0.6 mm

External surface coating

- **PES/ polyester 25**
  Highly durable 25 µm coating with medium-term durability.
- **Pvf2**
  25 µm thick fluorocarbon coating with excellent colour stability even at temperatures of up to 120 °C and very good durability.
- **Kingspan Spectrum™**
  50 µm semi-gloss polyurethane coating with a lightly textured finish, offering excellent durability and weather resistance. Its high flexibility provides excellent resistance to mechanical damage.

Internal coating

Coated with a protective layer (usually light grey).

The material specification depends on Kingspan's production capabilities. Please contact the Kingspan technical department.

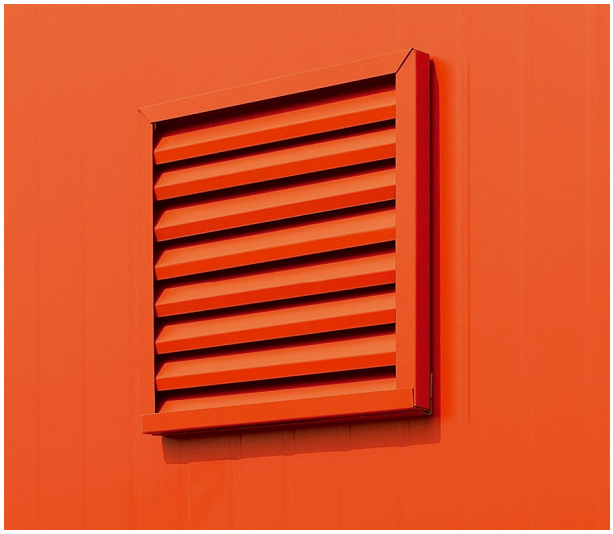



Aluminium louvres (non-standard)

Aluminium louvres

The advantages include greater flexibility in shape and the option to produce them in any colour.

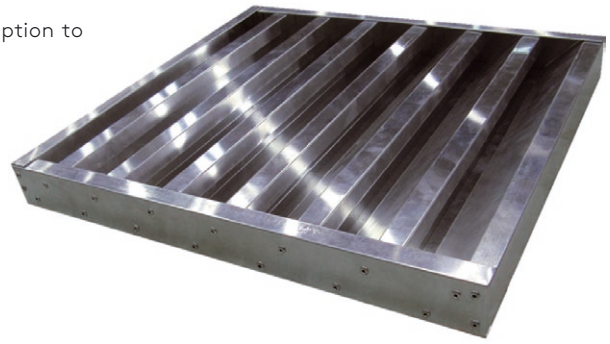

Technical specifications

- Custom-made production in dimensions and shapes according to individual customer requirements
- maximum length 3000 mm, maximum width 1500 mm
- Powder-coated finish
- For harsh conditions

Material

- aluminium sheet with a powder-coated finish, ensuring high quality and durability and available in a colour of the customer's choice



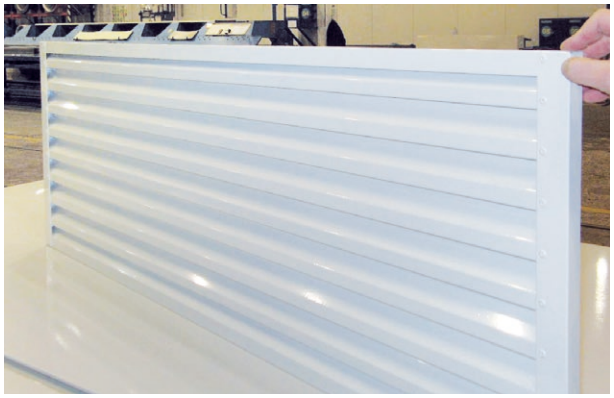



Corner panels

Prefabricated corner panels

KS NF, KS NC, KS TL QuadCore®, KS AT, KS AWP, KS FR K-Roc® and KS FH K-Roc® Wall Panels allow corners and internal corners to be formed using pre-formed sandwich panels. The connection method to the standard external wall cladding and the geometry of the corners are shown in the figures.



Key features

- supplement to sandwich panel cladding
- easy installation
- unconventional and attractive solution
- wide range of colour options
- reduced need for flashing components

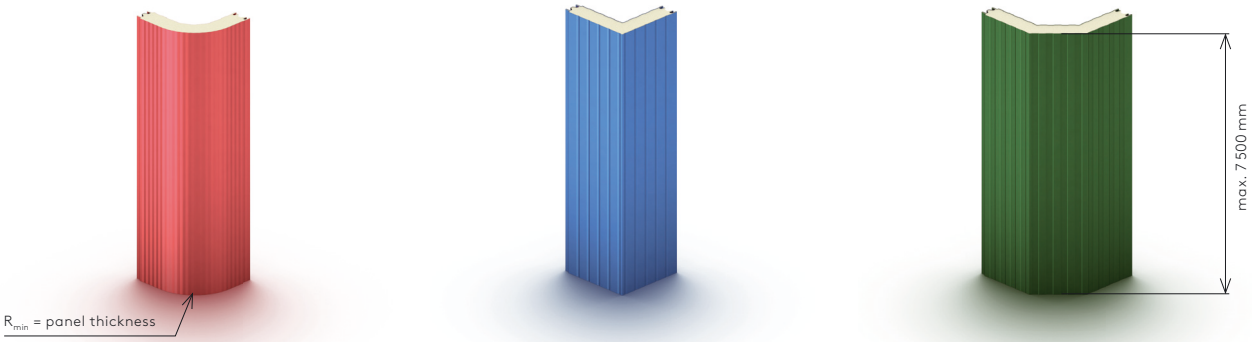

Vertically installed panels

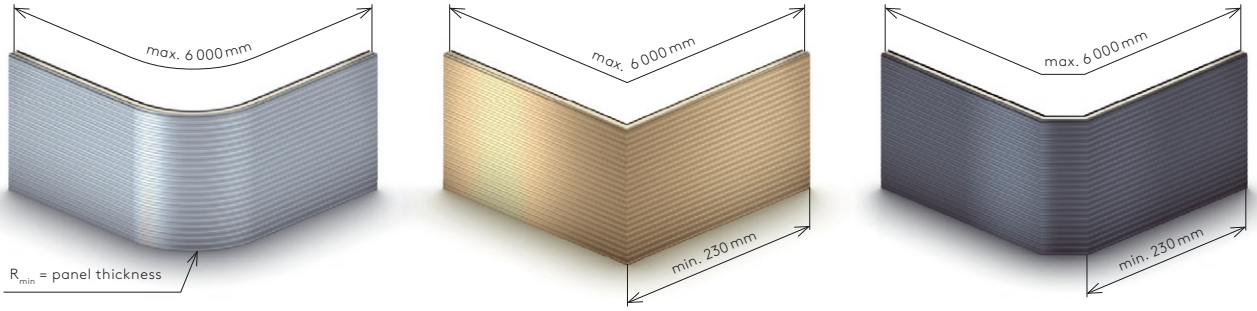

Horizontally installed panels

Manufacturing limitations may differ for individual panels and depend mainly on the orientation and weight of the final component. Specific options can be discussed with our specifiers or with the Kingspan technical department.





Corner panels





Connection method to standard external wall cladding and corner geometry

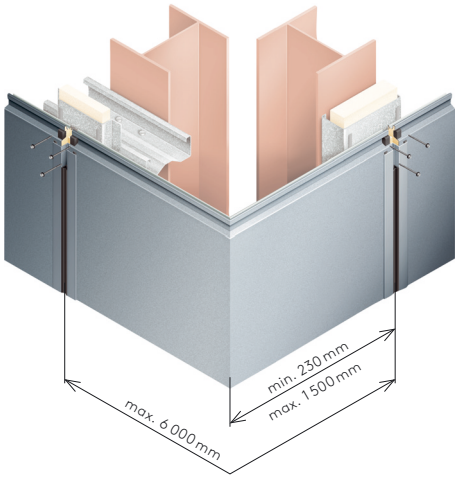

External horizontal angled panel

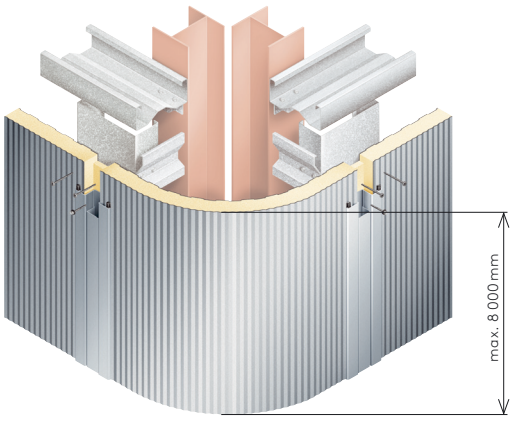

External vertical curved panel

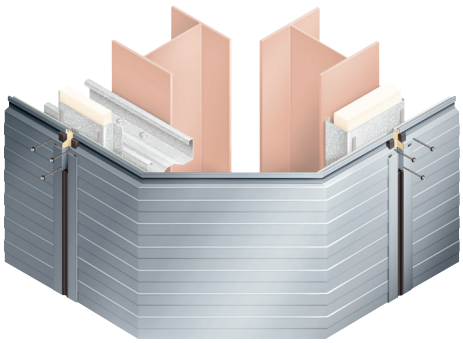

External horizontal double-angled corner panel

We offer a wide range of colours and coatings, corresponding to the insulation panel product range.

Manufacturing limitations may differ for individual panels and depend mainly on the orientation and weight of the final component. Specific options can be discussed with our specifiers or with the Kingspan technical department.

Photovoltaic solutions
PowerWall Karrier

Solutions for wall-mounted installation of any photovoltaic panels.

Why change is needed?

The undeniable impact of our day-to-day activities places decarbonising the built environment as a major factor in mitigation of climate change.

Innovation and deployment of clean energy solutions, on both existing buildings and new construction, is essential in meeting climate change goals.

What we can do?

Buildings are a source of enormous untapped energy efficiency potential.

We have the ability to futureproof our buildings - optimise energy efficiency, reduce carbon emissions and create healthy, resilient spaces in which to live and work. Here's how...

Complete façade solutions including photovoltaic modules

Photovoltaic façade panels are a complete solution, supplied with the entire mounting system. The mounting system consists of special aluminium profiles, allowing the module to be mounted to Karrier panels both vertically and horizontally.

A photovoltaic ventilated façade is the perfect solution for installing a photovoltaic structure in a building. In this way, energy can be extracted from solar radiation, while enhancing the aesthetic qualities of the building in question, thus complementing the architecture of the building.

In addition to combining design and aesthetics, photovoltaic facades have numerous features that directly benefit the functionality of the building, as well as the environment and walls.

Product highlight

- The Karrier system ensures adequate ventilation of the photovoltaic modules, contributing to the stable operation of the photovoltaic modules
- Stable construction supported by certification
- Improved insulation performance of the building
- Every project is subjected to an efficiency analysis
- Half-cell lower operating temperature
- Power from 200 W/m2
- Above 20% module efficiency
- Greater than 80% module efficiency after 30 years
- Less than 2% efficiency degradation in the first year
- Generates savings through the generation of free electricity

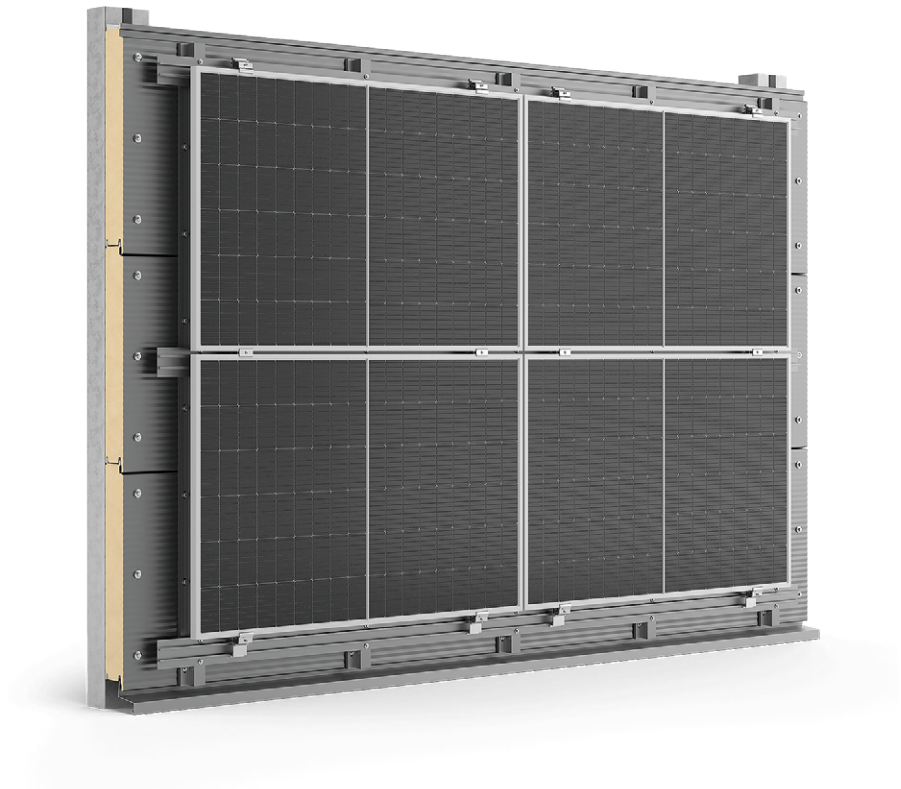

PowerWall Karrier

Wall-mounted system with photovoltaic modules based on the Karrier wall panel, specially designed and certified to carry loads from the external façade cladding up to 40 kg/m2, and the PV modules. The system includes a complete set of mounting accessories, allowing the PV module to be installed to the Karrier panels both vertically and horizontally.

System components



Karrier
Architectural Wall Panel
Wall sandwich panel specially designed and certified to carry loads from external façade cladding that provide a structural load-bearing capacity of up to
40 kg/m^2

Assembly components
The system assembly components are the profiles attached to the Karrier panel, the horizontal profiles for mounting the PV module mounting clamps and the mid and end clamps for fixing on the extreme edges of the module.

PV module
Recommended photovoltaic module with up to 21.7% energy efficiency. The PV module is not necessarily included in the PowerWall Karrier system supply.

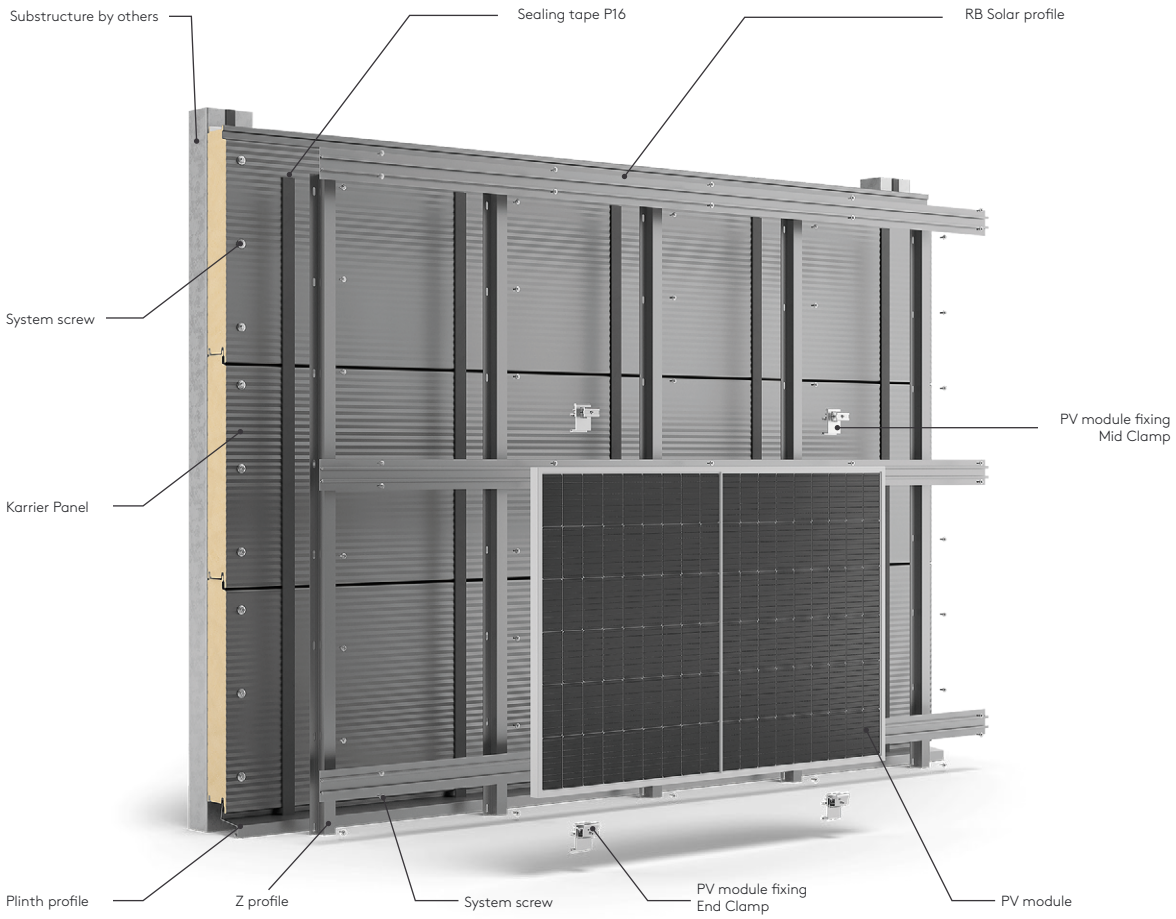

PoweRail RW

System for roof-mounted photovoltaic panels.

Kingspan's PoweRail RW has been developed specifically for the installation of solar PV modules on pitched roofs with KS RW / KS RW QuadCore® Roof Panels for both new build and retrofit projects.

System highlights

- Lightweight design
- Quick and easy installation
- Cost effective solution
- Fixings included
- Suitable for both new build and retrofit projects
- Compatible with most standard PV modules
- Can be sold as a system with KS RW QuadCore® Roof Panels, mounting system and PV modules or as a solar PV mounting system only

System components

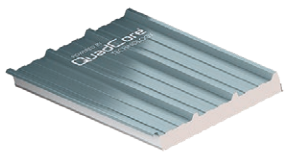

KS RW / KS RW QuadCore®
Roof sandwich panel with trapezoidal profiling and visible fixing that can be installed in all types of buildings with a minimum roof slope of 7%.



PowerRail RW
PV module fixing clip for quick and easy installation.

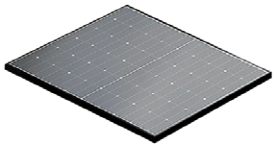

PV module
Recommended photovoltaic module with up to 21.7% energy efficiency. The PV module is not necessarily included in the PoweRail RW system.

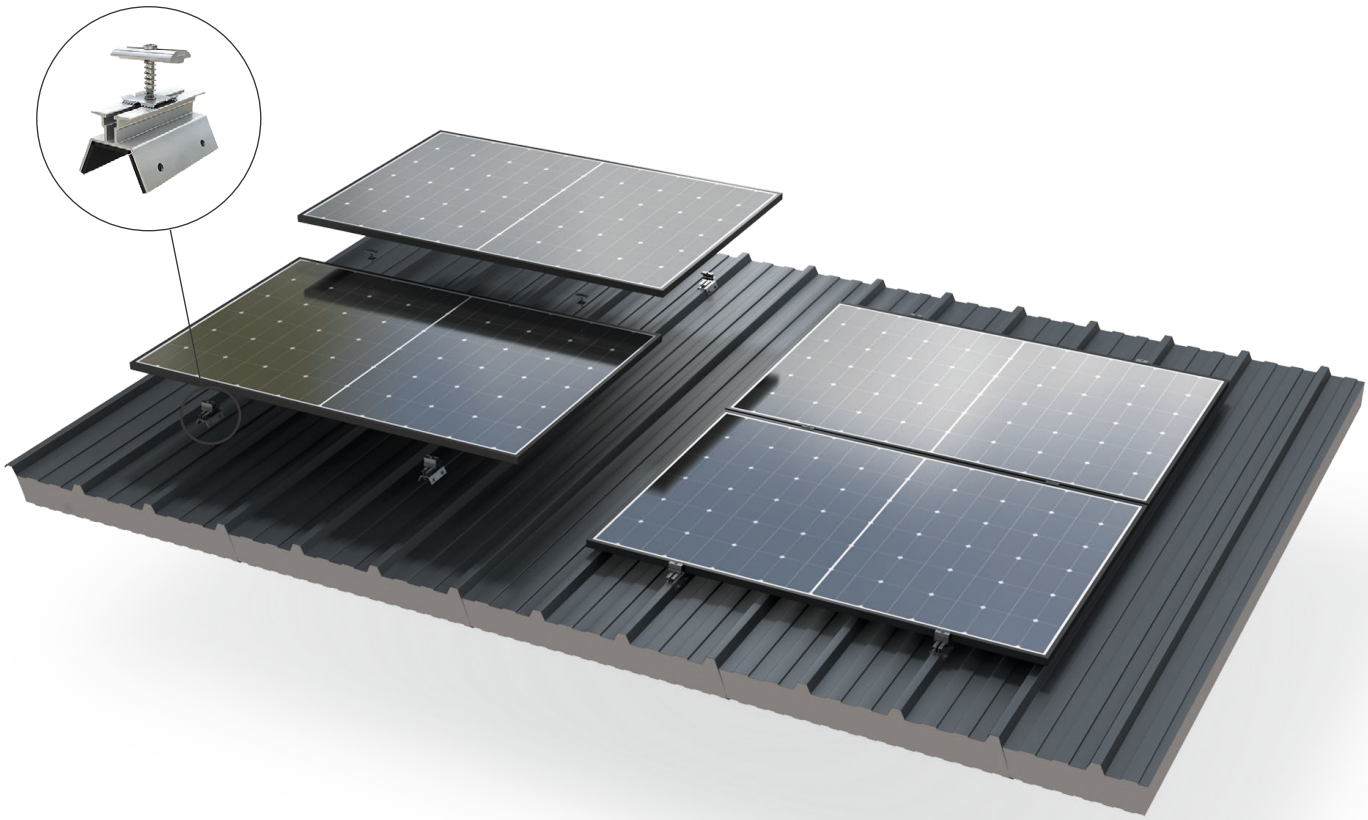

PoweRail RW

Kingspan PoweRail RW Technical Information

Dimensions

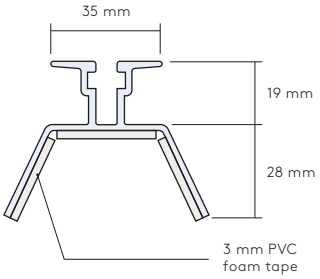

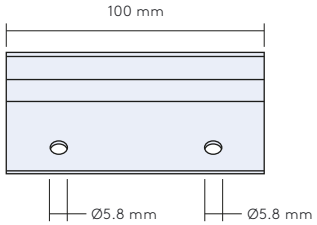

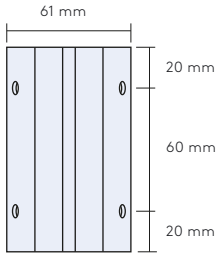

Physical Properties

Weight

- < 1 kg / m^2

Materials

- A2 stainless steel fixing
- PVC foam tape
- Aluminium (EN AW-6060 T6)

Fixings

- High quality stainless steel grade A2 to ISO 3506, EN 1.4301 to ISO 10088 and AISI 304
- High quality hardened carbon steel drill point
- Pierce point geometry designed to minimise swarf generation
- S16 stainless / EPDM vulcanised sealing washers
- 8 mm Hex

Fixing Locations

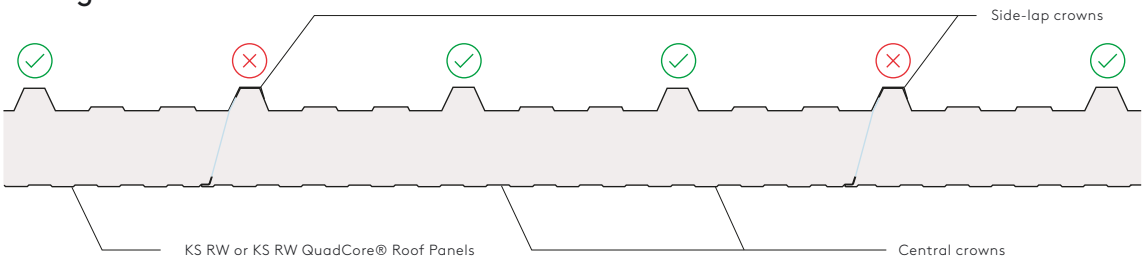

Installation

Consideration should be given to the layout of a solar PV array in order to maintain the integrity of all weather seals and coatings of KS RW or KS RW QuadCore® Roof Panels.

PoweRail RW is designed to be fixed only to the central crowns of KS RW or KS RW QuadCore® Roof Panels and should not be installed into the end lap between two KS RW Roof Panels, see above.

Certification and Testing

Kingspan PoweRail RW has been tested to:

- EN 14437: 2004 - Determination of the uplift resistance of installed clay or concrete tiles for roofing - Roof system test method.
- CEN/TR 15601: 2012 - Hygrothermal performance of buildings - Resistance to wind-driven rain of roof coverings with discontinuously laid small elements - Test method.

Kingspan PoweRail RW is a new product and will undergo a series of testing and certifications. Please consult our team or your local Kingspan representative regarding the latest testing and accreditation the product has achieved.

Daylighting solutions
KS PC 20 and KS PC 40 Rooflight Panel





Kingspan Rooflight Panels reduce the need for artificial lighting in buildings, resulting in energy savings.

Introduction

Sustainable development is a modern concept that applies not only to the construction industry but also to many other sectors. However, sustainability is far more than just a passing trend. It is a way of living and building that also helps protect the environment in which we live.

There are many ways to reduce our impact on the environment, but one of the simplest and most cost-effective is to reduce energy consumption.

So how can you reduce the need for artificial lighting while maintaining a functional and comfortable building environment? The solution is to incorporate translucent panels into the roof structure. By allowing more natural daylight into a building, the need for artificial lighting is reduced. The benefits of natural daylight go beyond energy savings. Research has also shown that increased exposure to daylight can have a positive effect on health and learning ability, while also improving workplace productivity.

Kingspan KS PC 20 and KS PC 40 Rooflight Panels allow natural light to enter the building, significantly reducing the need for artificial lighting.

This daylighting system is designed for use in combination with KS RW Roof Panels. The daylighting panel is manufactured from lightweight, high-quality and durable polycarbonate. The product offers excellent UV resistance, ensuring long-term colour stability and maintaining its thermal insulation properties over time.



KS PC 20 and KS PC 40 Rooflight Panel

Technical specification

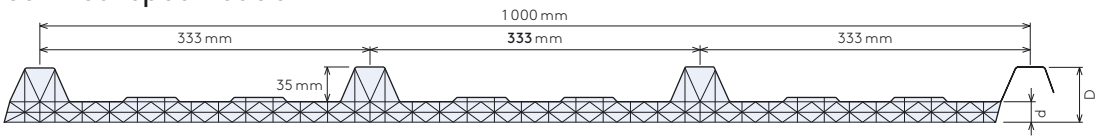

Compatibility of KS PC and KS RW Roof Panel

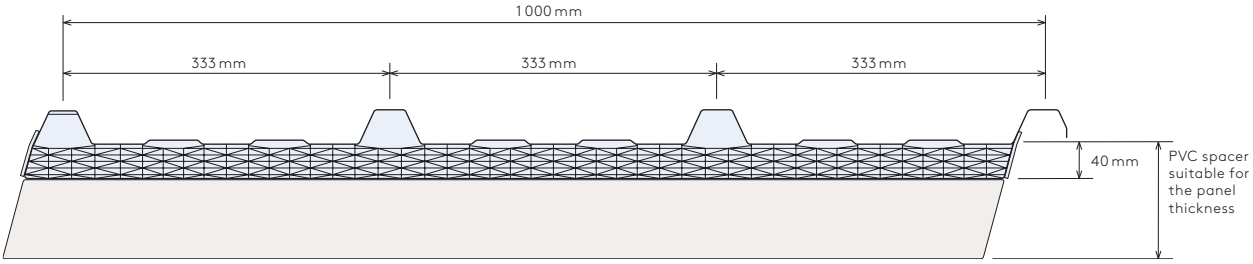

* No spacers are required when installing the 40 mm thick KS RW roof panel.

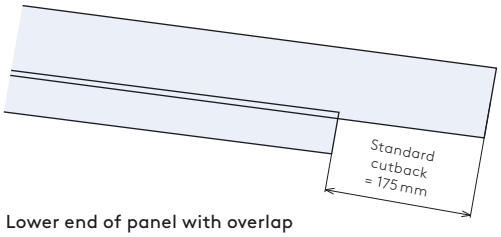

Lower end of panel with overlap

Standard lengths

Kingspan KS PC 20 is supplied in standard lengths of 1.0–8.3 m (including cutback).

Kingspan KS PC 40 is supplied in standard lengths of 1.0–8.3 m (including cutback).

Dimensions and weight		
	PC 20	**PC 40**
dimension d - core thickness [mm]	20	40
dimension D - overall panel thickness [mm]	55	75
weight [kg/m^2]	3.3	4.8
Product tolerances		
length [mm]	±3	
thickness [mm]	±3	
squareness of cut [mm]	±5	
Thermal insulation properties		
	PC 20	**PC 40**
thermal transmittance U-value [W / m^{2}K]	2.0	1.0
Light transmittance		
	PC 20	**PC 40**
visible light transmittance τ_v [%]	65	38

Seals and infill materials

Kingspan KS PC 20 and KS PC 40 Rooflight Panels are factory-fitted with anti-condensation tapes along both longitudinal sides. During installation, 5 × 5 mm butyl sealing tape is applied in the open flute of the longitudinal joint and in the end overlap of the transverse joint (in two rows).

The translucent panel is installed on plastic spacer profiles, which are fixed to the supporting structure using screws. Before installing the panel, 20 × 3 mm PE sealing tape is applied to the spacer profile.

The complete layout of sealing tapes, fasteners and connecting elements is specified in the installation instructions, which are available from the Kingspan technical department.

Structural design

The maximum support spacing for KS PC 20 and KS PC 40 panels depends on the snow and wind load. For further information, please contact the Kingspan technical department.

KS HTL Rooflight Panel

KS HTL Rooflight Panel provides excellent interior daylighting without significantly increasing the building's energy consumption. This can help reduce electricity costs and CO_2 emissions.

Introduction

Every workplace must have adequate and suitable lighting, with as much natural daylight as possible. One of the most effective ways to bring daylight into a building is to use rooflight panels, which, particularly in large buildings, can be up to three times more effective than windows installed in external walls.

The diffusion of natural light provides even illumination throughout the space and helps prevent glare.

Energy savings are the most readily quantifiable benefit. Calculations have shown that, with optimal use of rooflight panels, it is possible to save 35–55% of annual energy consumption for lighting.

Reduce your electricity costs by up to 55% with KS HTL Rooflight Panels.

Applications

- The KS HTL Rooflight Panel allows natural daylight to enter the building while meeting the required thermal insulation performance and aesthetic requirements of the building envelope.
- The product consists of a trapezoidal-profiled fibreglass outer surface and multiwall polycarbonate on the interior side of the panel.
- The KS HTL Rooflight Panel is designed for use in combination with KS FF K-Roc® panels with a mineral wool insulation core.
- The KS HTL Rooflight Panel is UV resistant, lightweight and offers excellent thermal insulation performance (U = 1.47–1.64 W/m²·K).

System highlights

- Excellent thermal transmittance value: U = 1.47 W/m²·K (when using a 32 mm thick panel)
- Good light transmittance
- UV resistant
- Complete factory-supplied product
- Lengths from 1.0 to 6.5 m (total length including the end overlap)
- Module width: 1,000 mm
- Lightweight and durable
- Factory-supplied PET spacers make installation easier and faster
- Manufactured in accordance with ISO 9001 and ISO 14001
- Complete system including all details



KS HTL Rooflight Panel

Technical specification

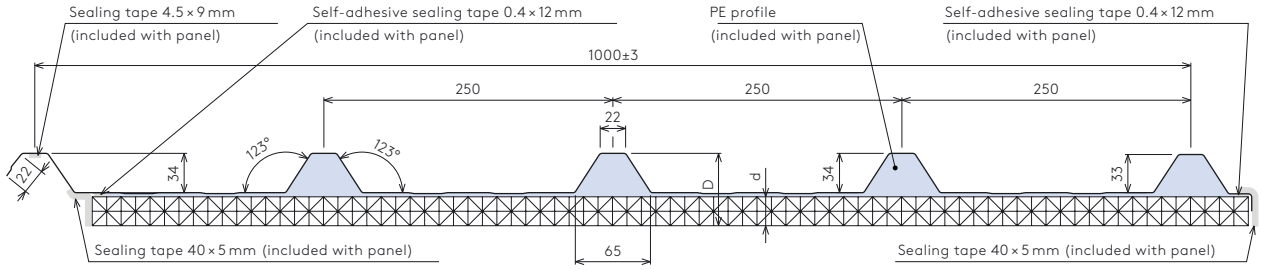

Cross-section of the panel

panel thickness [mm]	25
weight [kg/m²]	5.9
visible light transmittance tv [%] (dle ČSN EN 410)	47
total solar energy transmittance g [%]	50

Standard lengths

Standard lengths range from 1.0 to 6.5 m (including the end overlap). The shape of the upper fibreglass surface is the same as that of the KS FF K-Roc® Roof Panel.

Product tolerances	
length [mm]	± 10 mm (finished product)
thickness [mm]	± 10 mm (polykarbonate)
squareness of cut [mm]	± 2 mm (finished product)

Thermal insulation properties

Depending on the thickness of the polycarbonate sheet, the U-value of KS HTL Rooflight Panel ranges from 1.47 W/m²·K for a 32 mm thick sheet to 1.64 W/m²·K for a 25 mm thick sheet.

Seals and infill materials

The KS HTL Rooflight Panel is factory-fitted with anti-condensation tapes along the sides and sealing tape in the open wave of the longitudinal joint. The panel also includes a PE profiled element located between the fibreglass surface and the polycarbonate sheet.

At the transverse joint, the panel must be fitted with two rows of P21 butyl sealing tape, 10 × 3 mm (applied during installation – see construction details – transverse joint).

The complete layout of sealing tapes, fasteners and connecting elements is specified in the installation instructions, which are available from the Kingspan technical department.

Structural design

The maximum support spacing for KS HTL panels depends on the snow and wind loads. For further information, please contact the Kingspan technical department.



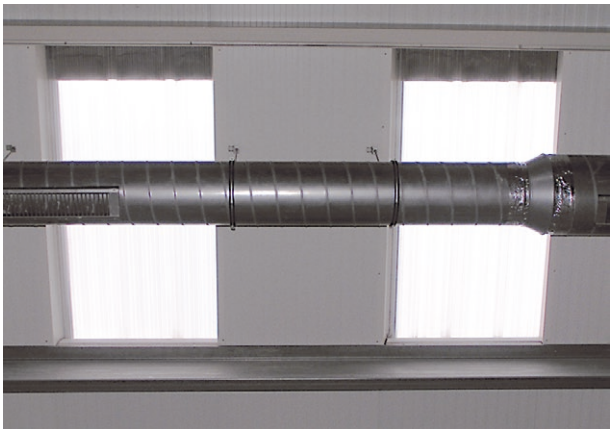

Wall-Lite Panel

Kingspan Wall-Lite offers excellent natural daylighting while maintaining the required thermal and aesthetic performance of the building.

Introduction

Kingspan Wall-Lite are translucent wall panels that allow natural daylight to enter the building while maintaining thermal insulation performance and an attractive appearance.

Good light transmittance and thermal insulation performance help reduce energy costs without generating CO_2 emissions, while providing building occupants with high-quality natural daylight.

The Wall-Lite system is an alternative to traditional translucent panel systems. Its main advantage is the ability to combine the system with KS AT and KS AWP Wall Panels.

The Kingspan Wall-Lite rooflight panel offers high UV resistance, low weight and good thermal insulation performance ($U = 1.25\ W/m^2 \cdot K$). It also gives architects and designers greater creative freedom when designing energy-efficient buildings.



Applications

The KS Wall-Lite translucent wall panel is suitable for all types of buildings. It is supplied as a complete system with all details fully integrated. This significantly reduces installation time without requiring specialist qualifications from subcontractors.



System benefits

- Thermal transmittance: $U = 1.25\ W/m^2 \cdot K$
- Excellent visible light transmittance tv = 55 % (in accordance with EN410)
- Service life of up to 25 years
- Fully recyclable at the end of its service life, minimising environmental impact
- Architecturally coordinated solution in combination with KS AT and KS AWP panels
- Maintains colour stability over time
- Standard lengths: 2.0–8.0 m
- For other lengths, please contact the Kingspan accessories department (techinfo@kingspan.cz).
- Complete product supplied ready for installation – accelerating construction
- Easy installation without specialist qualification requirements
- System-supplied aluminium spacer profiles facilitate rapid installation
- Manufactured by a company certified to ISO 9001:2015 quality management standards
- System engineered with all relevant details

Wall-Lite Panel

Technical specification

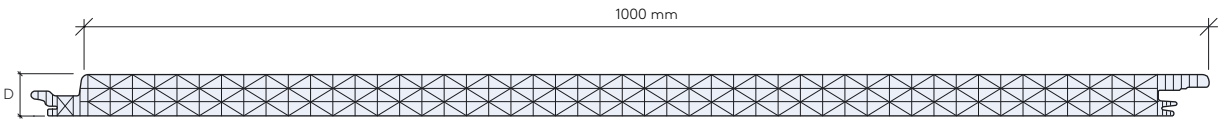

Cross-sectional view of the panel

Standard lengths

Standard panel lengths are available from 2.0 to 8.0 m.

Dimensions and weight	
D – thickness [mm]	38
weight [kg/m2]	4.7
Product tolerances	
panel length up to 6 m [mm]	±4
panel width [mm]	–2 /+6
thickness 38 mm [mm]	±1
squareness of cut [mm]	max. 5
Thermal insulation properties	
thermal transmittance U-value [W/m².K.]	1.25

Light transmission

- visible light transmittance v = 55 %
- solar energy transmittance g = 58 %

Seals and infills

Kingspan Wall-Lite is fitted with anti-condensation and vapour-permeable tape along the sides, sealing the hollow chambers of the polycarbonate sheet (part of the panel).

The complete arrangement of sealing tapes, fastening and connecting components is specified in the installation instructions, which are available from our Technical Department.

Combination options of KS Wall-Lite with KS AT / KS AWP panels		
Wall-Lite thickness	spacer profile width	KS AT / KS AWP thickness
	[mm]	
30	20.5	60
	30.5	70
	40.5	80
	60.5	100
	80.5	120
	110.5	150

Structural design

The maximum span between supports for KS WL panels depends on the wind load. For further information, please contact the Kingspan technical department.



Wall-Lite Panel

Joint detail of the daylite Wall-Lite Panel and KS AWP Architectural Wall Panel using spacer profiles



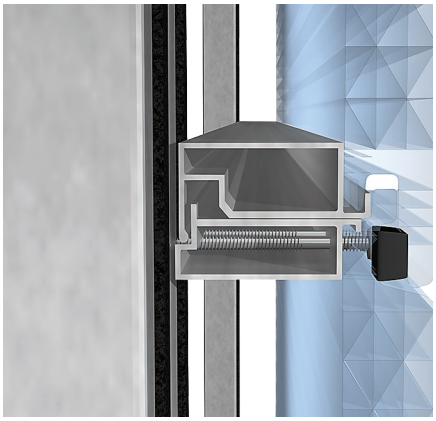

Note: The shape of the aluminium spacer profiles shown is illustrative only. For the exact shape and dimensions of the spacer profile, please contact the Kingspan technical department.







Kingspan Day-Lite Klick

Introduction

Kingspan Day-Lite Klick system is a structural polycarbonate translucent daylighting system designed for use in the vertical plane. Offering a great performance value, Klick is ideal for use in industrial, warehousing, and education projects that need natural daylighting.

It can be coordinated with Kingspan insulated panel systems, but is flexible enough to be used with any other adjacent cladding system. With its fast lead time, light weight, and simple "Klick" panel connection, Klick can be implemented very quickly.

Standard colours: Clear, Opal

Other available options: blue, anti-reflective and infrared-reduced

Specifications

The Klick system starts with a two piece "U" shaped frame that surrounds the entire perimeter of each Klick opening. Once this is secured to the building's structure, the Klick panels are slid into place with each adjacent panel "Klick"ing into the previously placed panel.

If the opening is taller than the span tables below indicate the panel can span, then mid-span support needs to be provided; where each edge of panel crosses this support, a hidden clip grabs a flange of the panel and secures it back to the building. This allows for hardware to remain hidden.

Technical specification

Property	Value	
Panel thickness	40 mm (8 wall)	
Thermal transmittance U-value (W/m²K)	0.98	
Weight (kg/m²)	4*	
Module width	500 mm	
Maximum panel height	12 m	
Typical maximum span	1.25–2 m	
Standard Colours	Clear	Opal
Fire Classification EN 13501-1	B-s1, d0	B-s1, d0
Visible Light Transmission (VLT)	60 %	49 %
Solar Heat Gain Coefficient (G)	0.50	0.40
Sound Reduction Index SRi	21 dB	
Ball Shot resistance (DIN18032)	T3	

* A full system weight, including perimeter extrusions, will depend on project specific design. Please contact the Kingspan technical department for more information.The U-value has been calculated using ISO 6946:2008. Visible Light Transmission per NF P 38-511, tolerance of +/- 3%.

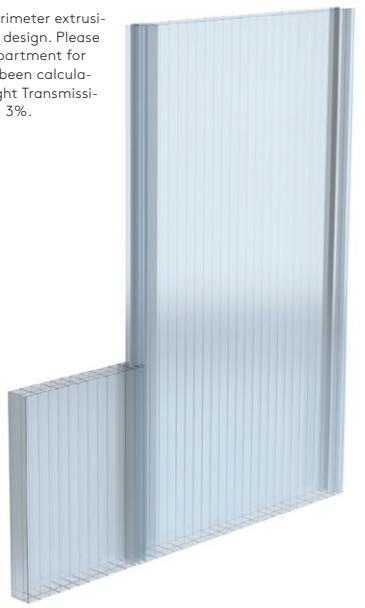

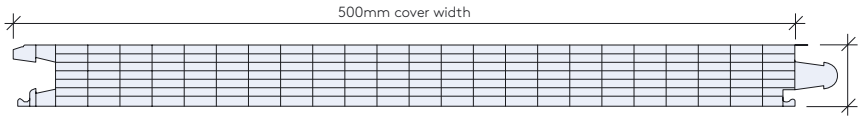



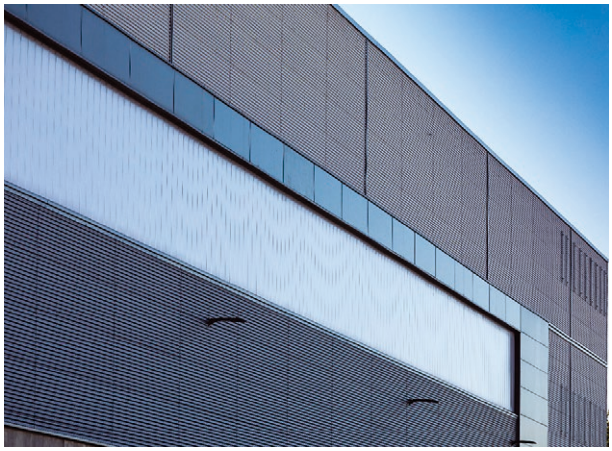

Kingspan Day-Lite Klick

Applications

- 500mm cover width
- 40mm polycarbonate Klick panel thickness

The Kingspan Day-Lite Klick system is installed as part of the façade and can be combined with other building cladding systems.

Sustainability

With a U-Value of 0.98, Klick offers insulation on par with modern double-pane insulated glass systems. When a pro-ject needs to be re-skinned or demolished, the aluminium and polycarbonate that makes up the vast majority of the system can be 100% recycled.

Durability

The 40mm thick Klick panel is a proprietary polycarbonate design.

- While polycarbonate itself is inherently impact resistant, in its pure state, it has low UV-Stability.
- We have added an integral UV-Inhibitor to the exterior layer of the panel that allows the panel to last long term.
- Being integral to the plastic means it is not possible for this protective layer to peel or wear off like the protective barrier used by other plastic glazing systems.

Warranty

- Covers loss of light transmittance and hail damage.
- For full warranty terms and conditions, please contact the Kingspan technical department.

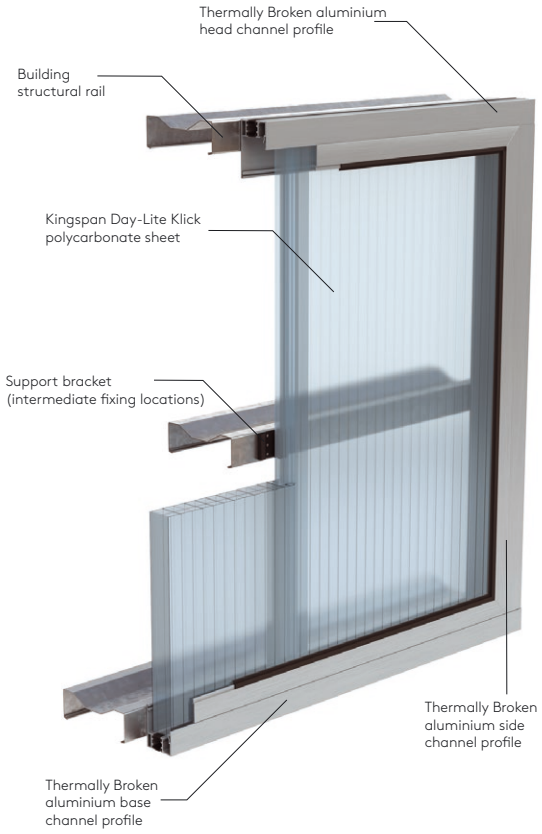

Durability

- Building structural rail
- Kingspan Day-Lite Klick polycarbonate sheet
- Support bracket (intermediate
- Thermally Broken aluminium base channel profile
- Thermally Broken aluminium head channel profile
- Thermally Broken aluminium side channel profile

Single Span Condition							
Number of Supports	Wind Pressure (Pa)	2.50 m	2.20 m	2.00 m	1.75 m	1.50 m	1.25 m
2 Supports	Pressure	450	600	750	1000	1500	1750
	Suction	450	600	750	1000	1500	1750
3 Supports	Pressure	900	1250	1600	2500	2700	3000
	Suction	900	1050	1200	1400	1600	1800

Solatube® Tubular Daylighting

Using the Solatube® Tubular Daylighting system provides a new, revolutionary way of bringing natural light into buildings through the use of a highly reflective tube. This makes it possible to illuminate interior spaces even in areas where conventional daylighting through windows is not possible — throughout the day, from sunrise to sunset.

The Solatube® Tubular Daylighting system features a unique design distinguished by its versatility and exceptionally high efficiency.

The system can be installed in both flat and pitched roofs, making it suitable for low-energy buildings as well. An airtight tube with triple insulated glazing, combined with thermal insulation around the roof penetration, provides excellent thermal insulation performance.

The Solatube® system, including the insulated panel penetration component, is supplied as a complete product that can be easily installed into the supporting structure between the roof panels. This makes the system fully compatible with Kingspan insulated panels.

System benefits

- Provides natural daylight to the interior of buildings
- Helps meet daylighting requirements for buildings
- Easy installation – supplied as a complete product compatible with Kingspan roof systems
- Provides financial savings by reducing electricity consumption
- Energy savings of up to 90% during daylight hours
- Night-time operation – the system can be fitted with LED or fluorescent lighting
- Maintenance-free system

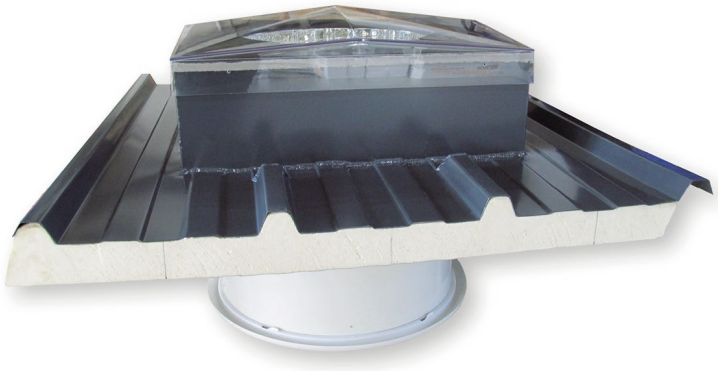





Rooflights

Kingspan manufactures and supplies both individual and continuous rooflights. Individual rooflights are also available in a unique "built-in" solution, with the rooflight factory-integrated directly into the panel. This provides an unparalleled solution for the installation detail.

Rooflights are available in a range of sizes and can be equipped with various accessories, such as an electric motor, rain/wind sensor, fall protection nets and more.

- Light transmittance: 35–77%
- Thermal transmittance (U-value): 0.6–3.0 W/m²·K

Manufactured dimensions – various sizes

- Standard sizes for individual rooflights range from 0.7 × 1.37 m to 2.0 × 3.0 m
- Continuous rooflights are available in widths from 1.0 to 6.0 m (unlimited length)
- Non-standard sizes available by agreement

We offer a range of rooflights from the renowned manufacturer Essmann, a German company that is part of the Kingspan Group.



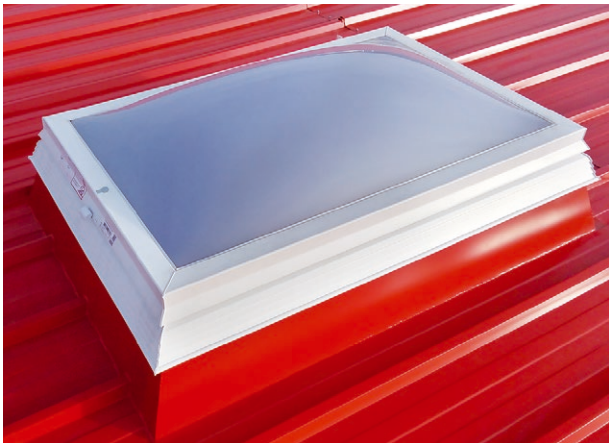

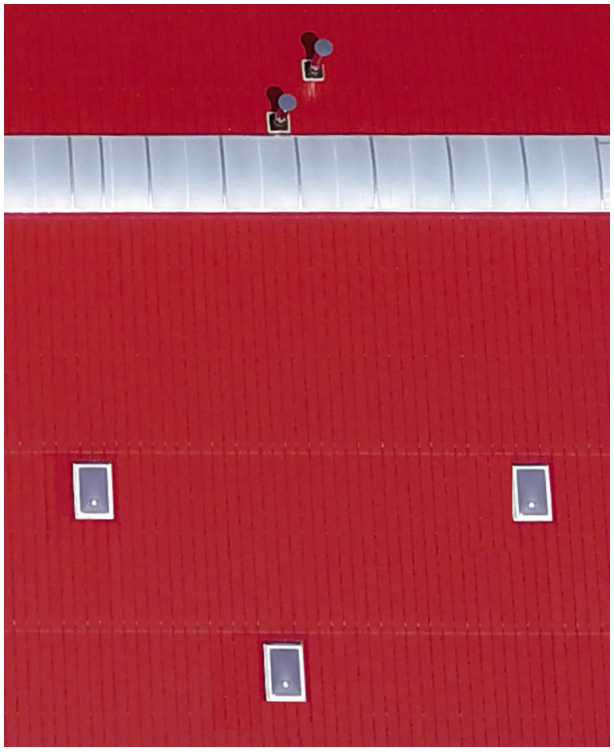

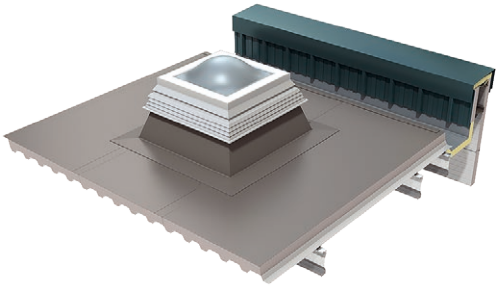

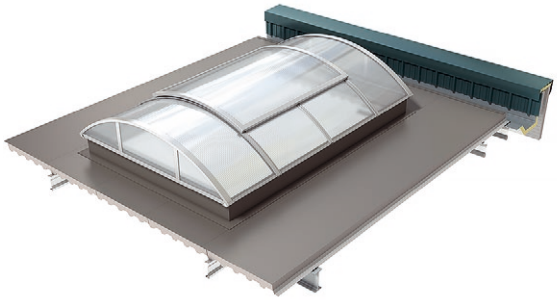

Active ventilation louvres
Kingspan Eura Excellent

Suitable for daily ventilation as well as smoke & heat exhaust for roofs and facades

Application

Kingspan Eura Excellent, with its enhanced insulation value, is based on the Eura louvred ventilator which has been used widely across numerous markets for many years. This ongoing development is done in the context of enhancing the thermal insulation values. Using new materials and techniques helps achieve a U-value improvement of up to 56%. Eura Excellent is perfectly capable of extracting large amounts of air and heat in a short time, and is suitable for both air supply (façade) and air extraction (façade and roof). The impact resistant, EN 12101-2 certified Eura Excellent can be supplied in two base versions with various high-insulating louvre types.

Area of application: for all buildings with primary high thermal insulation requirements.

Materials

Aluminium; tempered, sea water- and corrosion-resistant (EN AW 5754). Corrosion-resistant bearings. Seal incorporating a weather-resistant sealing strip longitudinally and energy strips. The seal is applied in such a manner that there is no risk of freezing. The aluminium is completely corrosion-resistant and is supplied untreated as standard. If desired the Eura Excellent can be supplied in an anodised or powder-coated design (in any RAL colour you require). Eura Excellent can also be designed to incorporate noise-damping wings and bird or insect mesh.

Enhancement of the thermal insulation value

Improvements to building regulations and stricter performance requirements with respect to the thermal U value of the building envelope mean that better performing products are increasingly specified. With Kingspan Eura Excellent, a U-value of up to 56% can be achieved with respect to the current generation of louvred ventilators.



	Type	Eura 20 mm insulated louvre	Eura Excellent 25 mm sandwich panel	U-value improvement
	U-values in W/m2K			
LB = low base	60-5	2.95	2.52	+15%
	120-12	2.55	2.04	+20%
	240-17	2.35	1.80	+23%
GHB = insulated high base	60-5	1.68	1.41	+16%
	120-12	1.81	1.42	+22%
	240-17	1.89	1.43	+24%

	Type	Eura 8 mm Isolux louvre	Eura Excellent 25 mm Isolux louvre	U-value improvement
	U-values in W/m2K			
LB = low base	60-5	3.69	2.66	+28%
	120-12	3.43	2.21	+36%
	240-17	3.29	1.98	+40%
GHB = insulated high base	60-5	2.14	1.50	+30%
	120-12	2.47	1.55	+37%
	240-17	2.68	1.58	+41%

	Type	Eura 4-6-3.3.2 insulation glass louvre	Eura Excellent 4 lowE - 13 Argon 90% - 3.3.2	U-value improvement
	U-values in W/m2K			
LB = low base	60-5	3.67	2.27	+38%
	120-12	3.39	1.74	+49%
	240-17	3.25	1.48	+54%
GHB = insulated high base	60-5	2.12	1.25	+41%
	120-12	2.44	1.20	+51%
	240-17	2.64	1.16	+56%

U-values calculated in compliance with EN ISO 10077-2

Kingspan Eura Excellent

Louvre types



Sandwich panel 25mm



Isolux louvre 25mm 5-wall

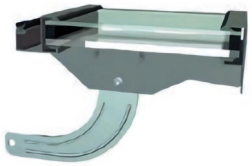

Insulation glass 4 lowE -
13 Argon 90% - 3.3.2

Regulations

The system has been tested and is certified in accordance with EN 12101-2.

Base

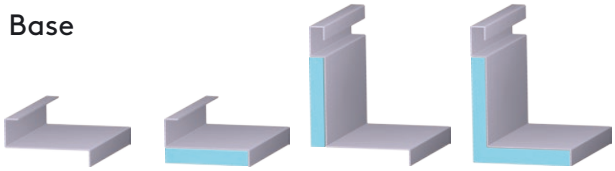

LB = Low Base

LB with flange insulation

GHB = Insulated High Base

GHB with flange insulation

Flanges

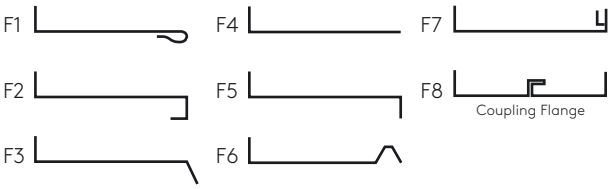

Cross Section

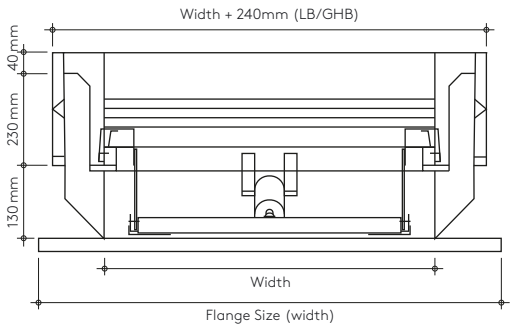

Longitudinal Section

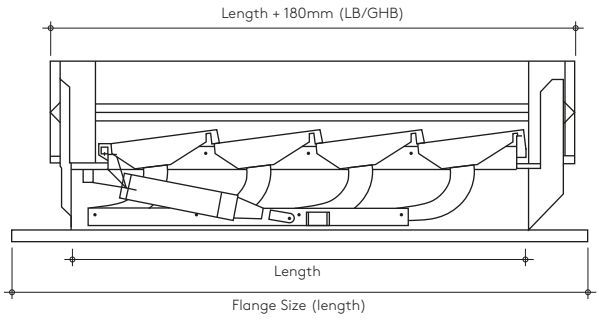



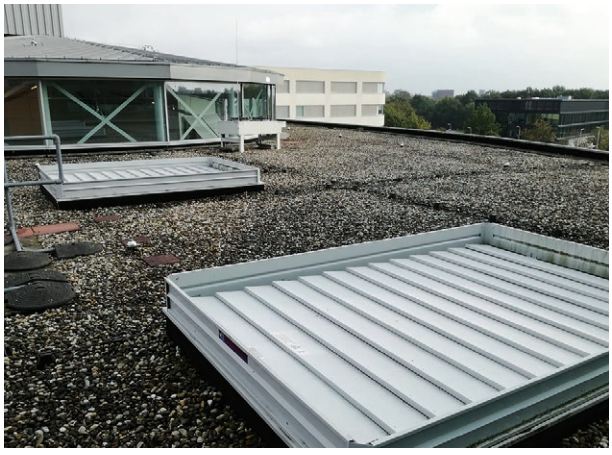

Built-in Roof Windows

Built-in Roof Windows provide an effective daylighting solution and can be easily integrated into KS RW or KS FF roof panels. Available with all types of glazing. The factory-pre-assembled system ensures excellent sealing together with a quick and easy installation.



Window frame sizes

- 780 mm × 980 mm
- 780 mm × 1180 mm
- 780 mm × 1400 mm
- 780 mm × 1600 mm
- 940 mm × 1180 mm
- 940 mm × 1400 mm
- 940 mm × 1600 mm
- 1140 mm × 1180 mm
- 1140mm × 1400 mm
- 1140 mm × 1600 mm

Other window sizes and configurations are available upon consultation with the Kingspan technical department.

Prefabricated roof penetrations enable straightforward installation on the roof. Once installed, the product requires no further finishing.

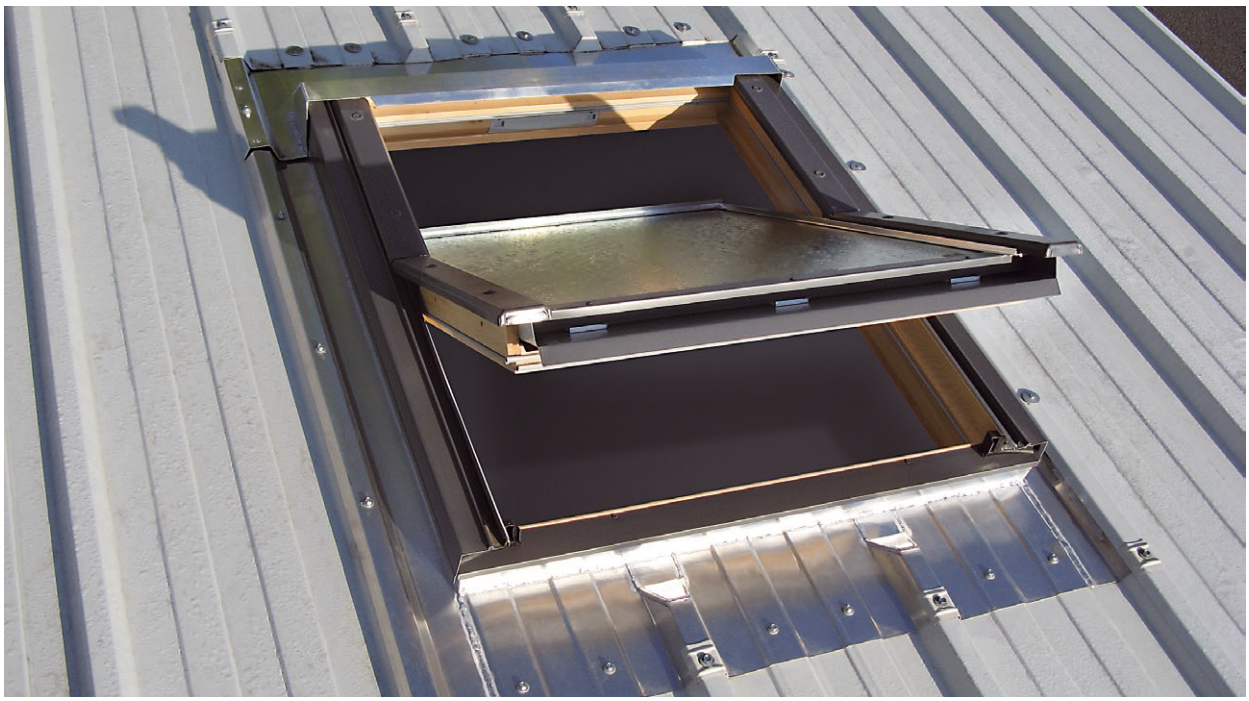

Fire protection mechanisms
SHEVS - Smoke and Heat Exhaust Ventilation System

Kingspan can supply special fire protection mechanisms, either integrated directly into the sky-lights or as dedicated wall-mounted mechanisms for pipe penetrations.

Fire protection systems for sky-lights are generally designed for all standard rooflight sizes offered by us. Depending on the customer's requirements, these systems can be operated using CO_2 cartridges or electrically.

Specific requirements for fire dampers are handled by our technical department, taking into account customer requirements and the applicable legislation in the country where the system will be installed.

Due to the complexity of the application, installation must always be carried out by a certified company.

Special requirements should always be discussed with the accessories technical specialist.

Fire Dampers

The dampers can optionally be fitted with units for everyday ventilation (pneumatic or electric). The unit automatically responds to changes in weather conditions, helping to ensure easy operation.

For availability and supply options, please contact the Kingspan accessories department.

Standard dimensions (size of openings in the roof structure)

- 1000×1000 mm
- 1200×1200 mm
- 1500×1500 mm
- 1000×1500 mm
- 1000×2000 mm
- 1200×2400 mm

Non-standard dimensions available upon agreement.

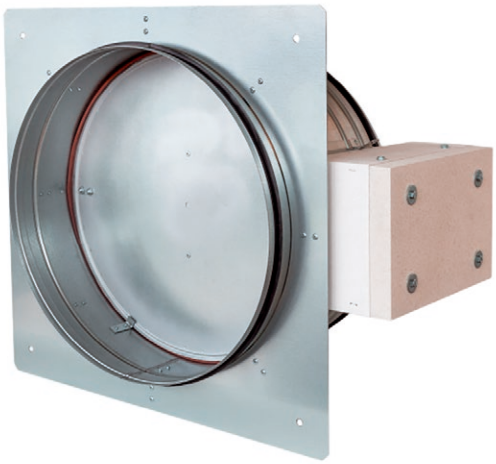





Aluminium products

Aluminium products enable quick and easy installation while ensuring reliable performance. They can also further enhance the originality of a building.

The primary material used is aluminium sheet with a powder-coated finish. This ensures high quality and long service life for all components, while also offering a wide range of colours to meet customer requirements. For X-Dek™ panels, sealing PVC membranes in standard shades of grey are used for roof penetrations.



System benefits

- Wide range of shapes and configurations
- Non-standard shapes
- Roof penetrations for KS RW, KS FF K-Roc®, X-Dek™, KS NR, KS FP K-Roc® and KS RP K-Roc® insulated roof panels
- Manufactured to meet individual customer requirements
- Powder-coated finish
- Complete, ready-to-install product requiring no further finishing
- Penetrations can be supplied insulated or non-insulated



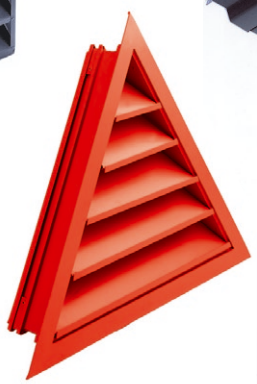



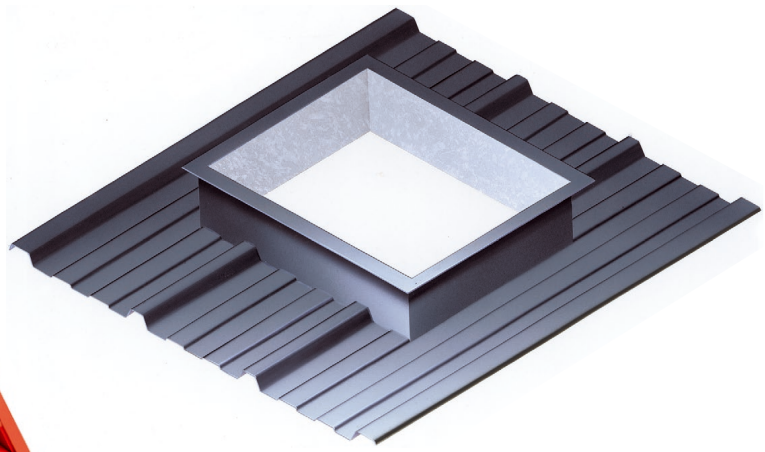

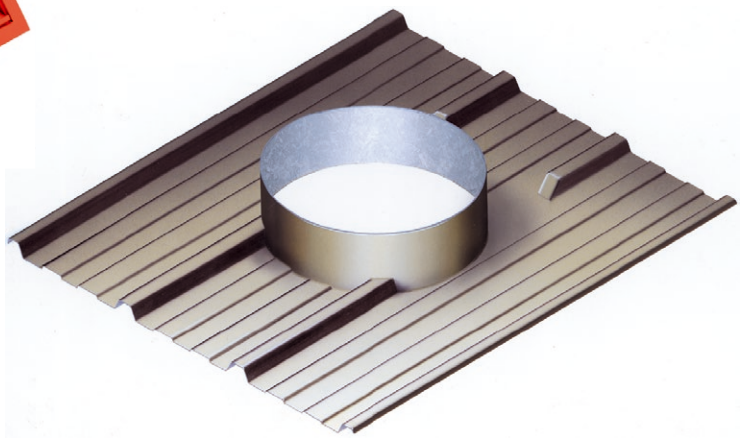

Roof Upstands

Aluminium roof upstands enable easy and reliable sealing on roofs. As a finished product, they require no additional finishing work.

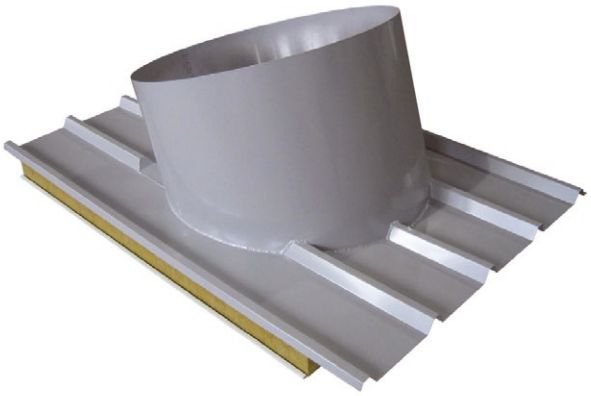



Roof upstands are ideally suited for use with KS RW and KS FF K-Roc® panels or on flat roofs (X-Dek™ panels), depending on the customer's requirements.

Standard technical parameters

- max. width: 1 000 mm
- max. length: 3 000 mm
- max. area: 2 m^2
- max. perimeter: 800 mm

Other dimensions can be manufactured by agreement.

Advantages of aluminium roof upstands

- manufactured to meet individual customer requirements
- flexibility in shape
- available in any colour
- upstands for KS RW, KS FF K-Roc® and X-Dek™ panels
- powder-coated finish
- finished product requiring no additional finishing work



Plastic window for SW panels
Kingspan Day-Lite P Window

Double-glazed tilt and turn windows with plastic profiles incorporating a steel core and a profile depth of 76 mm. Simple and quick installation using clamping frames for sandwich components with thicknesses of 80–120 mm. The extruded aluminium clamping frame is powder-coated as standard in white R9016 on the interior side, while the exterior colour can be selected from the standard colour range.

Construction / Material

- 76 mm depth (multi-chamber system)
- 67 mm window frame profile width
- 5 insulating chambers
- 2 sealing layers
- White base PVC profile
- Light grey seals
- Aluminium version available on request

Aluminium Clamping Frame

- Two-part frame with concealed drainage
- Frame width: 115 mm

Technical properties	
Profile depth [mm]	76
U_g Thermal transmittance of glazing/glass [W/m²K]	1.1
U_w Thermal transmittance of the window/ complete window (excluding the clamping frame), dimensions 1.23 × 1.48 m, in accordance with DIN EN ISO 10077-1 [W/m²·K]	1.2

Windows are manufactured to order according to the required dimensions.

Additional product features

- V-groove in the corner of the window
- Hardware groove at the bottom of the frame, covered with a dust strip
- Steel reinforcement, minimum thickness 1.5 mm
- Black insulated glass spacer (warm edge)
- Ventilation via perforated seals
- Hardware suitable for sash weights of up to 130 kg
- Hinge with rotation brake and safety device to prevent impact when the window is in tilt position
- Misuse protection device in both tilt and turn positions
- Standard aluminium window handle in white
- CE marking details are provided directly on the product, on a label located in the window frame groove

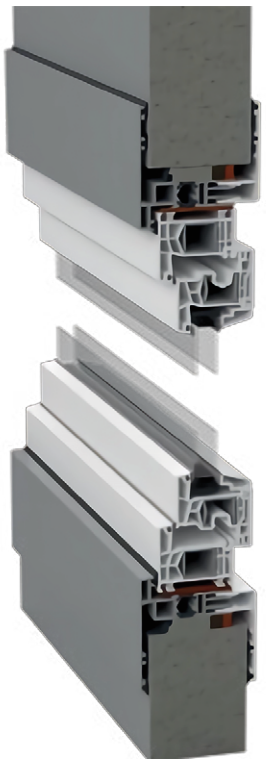

Plastic door for SW panel
Kingspan Day-Lite P Door

A double-glazed door system with a PVC profile incorporating a steel core, suitable for both inward- and outward-opening doors, for example as entrance or emergency exit doors. Quick and easy installation using a clamping frame for Kingspan sandwich panels with thicknesses of 80–120 mm. The extruded aluminium clamping frame is powder-coated as standard in white R9016 on both the interior and exterior sides.

The main material used is aluminium sheet with a durable powder-coated finish. This ensures high quality and long service life for all components, while also providing a wide choice of colours to meet customer requirements. For penetrations through X-Dek™ panels, sealing PVC membranes are used in standard shades of grey.

Construction / Material

- 76 mm depth (multi-chamber system)
- Frame profile width: 85 mm
- 5 insulating chambers, 2 sealing levels
- White base PVC profile
- Light grey seals
- Other materials available on request

Technical properties	
Profile depth [mm]	76
U_g Thermal transmittance of glazing/glass [W/m²K]	1.1
U_w Thermal transmittance of the door/ complete door, dimensions 1.10 × 2.20 m, in accordance with DIN EN ISO 10077-1 [W/m²K]	1.2

Custom Options Available on Request

- Clamping frame colour
- Double or triple glazing, or special infill
- Various door hardware options
- Security features (e.g. alarms)
- Aluminium, wood or additional external cladding

Additional Product Features

- Highly insulating 76 mm, 5-chamber system (Uf 1.2)
- Profile with offset geometry
- High torsional rigidity thanks to generously dimensioned steel reinforcement
- Sash corners welded and stabilised using high-strength corner joints
- Thermally insulated 20 mm aluminium threshold with drip bar
- Three-point locking system with 2 self-locking latches
- Softlock for tight closure in accordance with RAL requirements
- 3 locking keep plates
- White interior handle on an oval rose
- 300 mm stainless steel exterior pull handle
- Stainless steel exterior escutcheon for cylinder
- Profile cylinder lock with security function and 3 keys
- 3 white, two-part screw-in hinges
- CE marking details are provided directly on the product, on a label on the rear side of the door frame



Seals and infill materials

The building envelope is designed and installed to prevent all weather elements from penetrating the building. The envelope also regulates temperature and prevents air leakage. It is therefore important to correctly select, specify and install seals, tapes, sealants and infill materials to ensure that the completed envelope worked correctly.



Types of sealing materials

- butyl rubber sealing tapes
- PE sealing tapes
- PVC foam sealing tapes
- silicone sealants
- polyurethane expanding tape
- butyl seals
- other specialised seals

Opening infills

Where the end of the panel is fitted with sheet metal flashing, the panel will only make contact at the highest points of the profile, resulting in a gap between the profiling and the flashing. It is therefore necessary to insert a correctly sized infill into the profile to prevent the ingress of wind, water and insects. The following materials are available for this purpose:

- Polyethylene infill
- Other sealing materials as required for the specific detail
- Waterproofing membrane (accessory material for X-Dek™ panels)



Pressed galvanized profiles

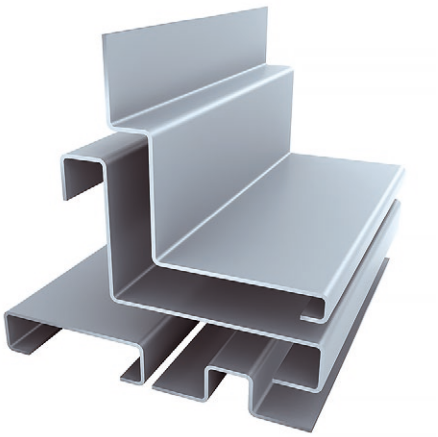

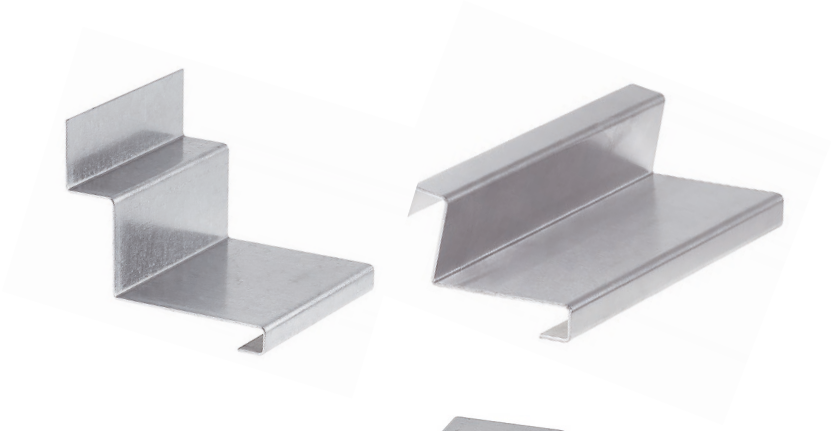

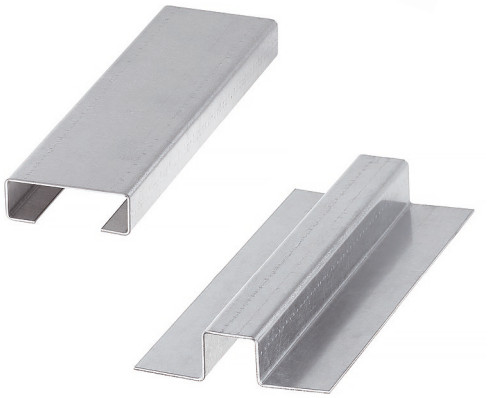

- manufactured using Kingspan equipment (8 m bending machine, 3 m press brake, 3 m shears, 3 m roll-forming machine) according to customer requirements
- various profiles (Z, U, L, etc. + non-standard profiles)
- profiles with grooves
- flexible delivery times and profile shapes
- profiles up to 8 m in length are available with a steel thickness of 1 mm
- profiles shorter than 3 m are available with steel thicknesses of 1.5 mm, 2 mm and 3 mm
- profiles are supplied on wooden pallets or in steel boxes, depending on the order size



Fall Protection Systems

Kingspan fall protection systems provide a safe solution for protecting maintenance workers and providing attachment points for their equipment during roof inspections, maintenance and repairs.

The amended standard further states: A roof on which technological equipment or a chimney is located must be designed to be accessible for foot traffic, at least in the areas intended for access to the equipment or chimney, or special structures must be installed on the roof to provide access to such equipment or structures.

Kingspan safety anchors fully comply with the above-mentioned requirements.

Advantages of Kingspan safety systems

- simple system, easy installation
- suitable for sandwich panels and trapezoidal sheets
- certified for fixing to the outer sheet of Kingspan insulated sandwich panels
- also suitable for use in combination with lifeline rope systems
- protection for up to 3 people simultaneously
- installed using rivets with sealing washers

Kingspan provides

- free preparation of technical drawings and quotations
- inspection and installation

FREE DESIGN AND PRICE QUOTATION.
Our designs are prepared by professionals and can be certified by a stamp from an authorised designer.



Fall Protection Systems

We offer fall protection systems for all types of roofs. We provide proven solutions certified in accordance with the applicable standards.

- system design and preparation of a quotation, including project documentation for the fall-arrest system (the relevant documentation must be provided)
- installation and inspection of the system can be provided if required
- delivery of standard components within 3 working days
- all products we offer are made exclusively from high-quality stainless steel

Let us design the best solution for your roof free of charge.



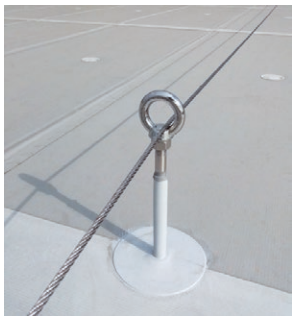





Fall Protection Systems – Roof safety features
Roof anchors for panels and trapezoidal sheets

Most common types of anchors for Kingspan

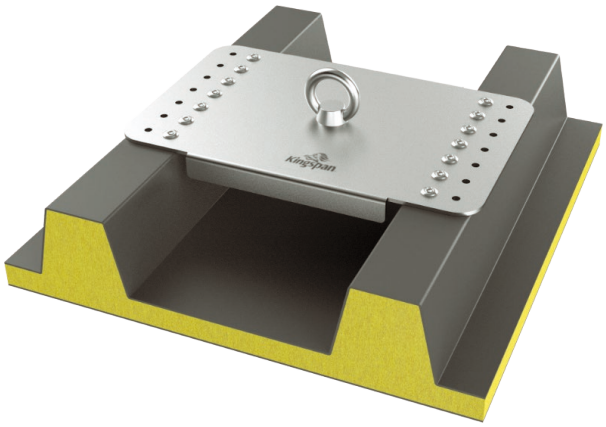

RX-SE-PL

- Suitable for panels: KS RW, KS FF K-Roc®
- Certified for sheet thicknesses from 0.45 mm
- Lengths (mm): 170, 340
- Stainless steel anchor point for sandwich panels. Installed using special stainless steel rivets and fixed to the outer sheet of the panel (no need to locate the purlins).

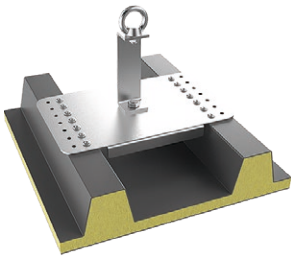

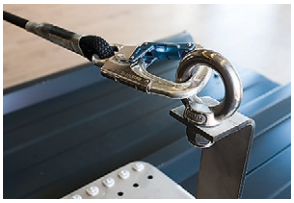

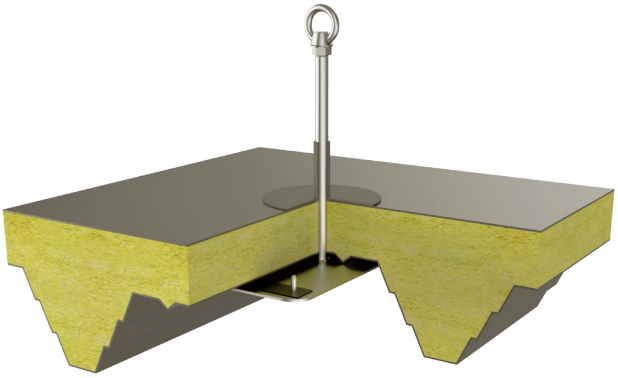

RX-SE-ZES

- Suitable for panels: X-Dek™
- Standard lengths (mm): 300, 400
- Description: Stainless steel anchorage point designed for sandwich panels and installed from the underside. The anchor is secured to the inner sheet using special screws.

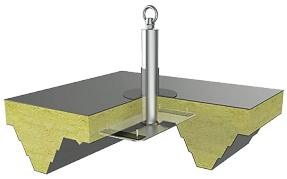



Other types of anchors available on request.

Fixings

The correct selection of fasteners has a significant impact on the overall quality of the completed building. Kingspan offers fasteners for all accessories and panels. All fasteners are selected in accordance with stringent quality requirements.



These fasteners secure roof and wall cladding panels or ancillary components to the primary or secondary supporting structure. They must meet the following requirements:

- Securement of roof and wall cladding to the primary or secondary supporting structure
- The overall structure must have sufficient strength to withstand the applied loads
- Watertightness must be ensured to prevent moisture/water ingress into the building structure
- The service life must match that of the cladding system
- The appearance must be compatible with the overall cladding

Primary Fasteners

Primary fasteners are used to secure insulated sandwich panels to the building structure.

In this application, the fasteners perform a load-bearing function and must be capable of transferring the loads acting on the cladding panels to the supporting structure throughout the service life of the building envelope.

Fasteners used for insulated sandwich panels are either thread-forming or self-drilling.

Other types of fasteners can also be supplied by agreement upon customer request.

Secondary Fasteners and Rivets

Secondary fasteners and rivets are used for side laps and for securing flashings.

Fasteners suitable for thin materials are required for installation.

The number of fasteners must be determined by structural calculation based on the applied loads. This generally means that the permissible load capacity of an individual fastener is not the primary consideration, as the overall load is distributed across a larger number of fasteners. When selecting fasteners for these applications, consult the manufacturer of the relevant structural material or the Kingspan technical department.

Materials and Service Life

The expected maximum service life of fasteners depends on their corrosion rate, which may be affected by the material properties, internal and external environmental conditions, and the building structure. In view of the overall service life of the building envelope, we recommend using stainless steel fasteners.

- Carbon steel – coated carbon steel fasteners provide reliable service on building roofs and walls for 15 years.
- Stainless steel – the expected service life of stainless steel fasteners is at least 50 years.

Product warranty

For projects covered by an extended Kingspan warranty, it is a strict requirement that stainless steel fasteners are specified and used.

Strength

Primary fasteners secure the panels to the building's supporting structure and must be sufficiently strong to withstand the applied loads. In practice, the most common load acting on fasteners is wind suction, which attempts to pull the panels away from the building's supporting structure.



Snowking

Snowkings are designed to retain snow on the roof, particularly in areas where a sudden release of a large amount of snow could otherwise occur. They allow snow to melt gradually, reducing the risk of snow sliding from the roof.

Kingspan will provide a snowking layout for your projects free of charge.

Z12 Snowking

Suitable for the following Kingspan panel types:

- KS RW roof panel
- KS FF K-Roc® roof panel

Snowkings can be supplied in colours matching the panels used on the building.

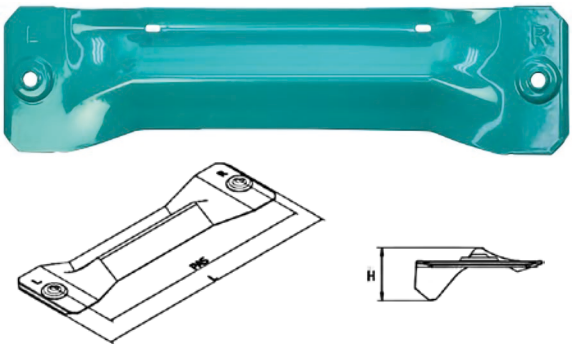

Supplied as standard without a surface finish – natural aluminium. Powder coating in a wide range of colours is available on request.

Z14 Snowking

Designed for buildings clad with KS RW or KS FF K-Roc® Roof Panels.

The snowking is manufactured from 3 mm thick aluminium sheet. It is 2 m long and weighs 1.5 kg. The product complies with current regulations and standards applicable to roof components.

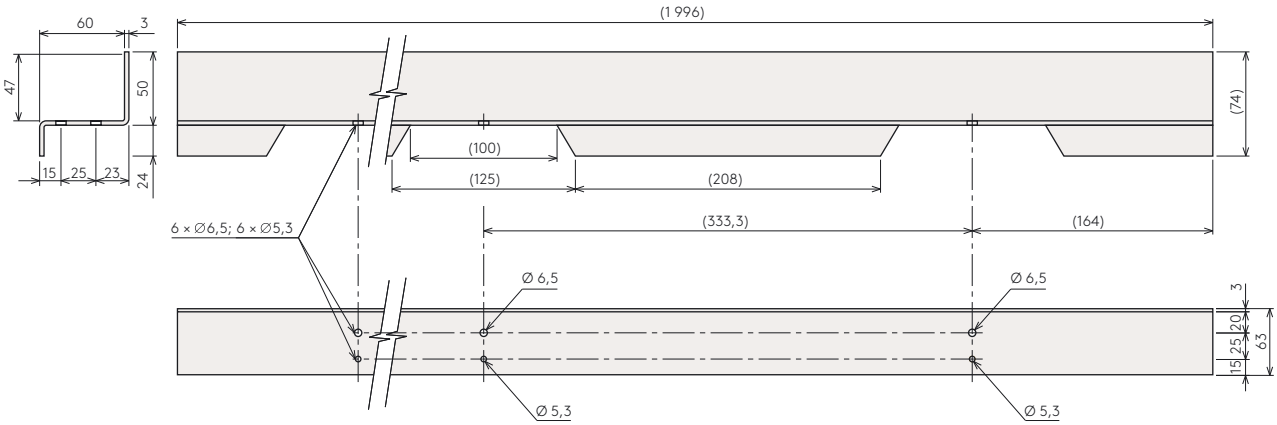





KOIN
Kingspan Online Inquiry System

- Browse products and technical details without registration
- Create your own non-standard sheet metal component in just a few minutes
- Use smart filters to instantly find the right panel and accessories
- Easily submit an online inquiry

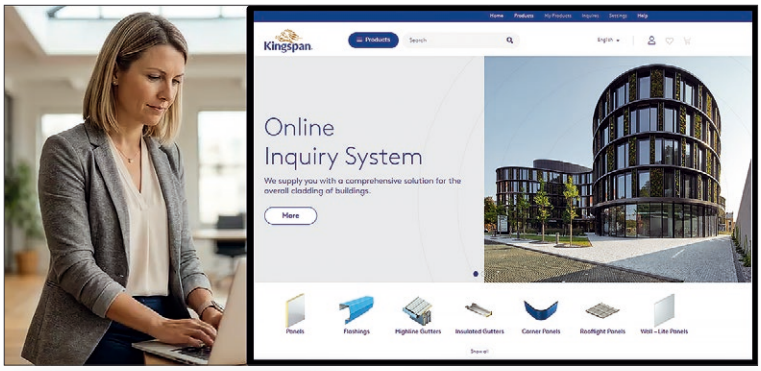



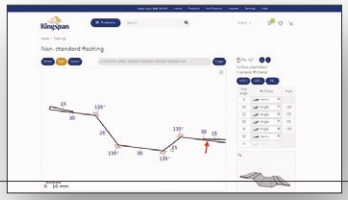

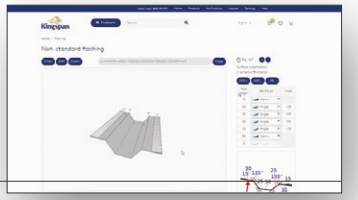

KOIN
Kingspan Online Inquiry

To register in the KOIN app, scan the QR code or click here.

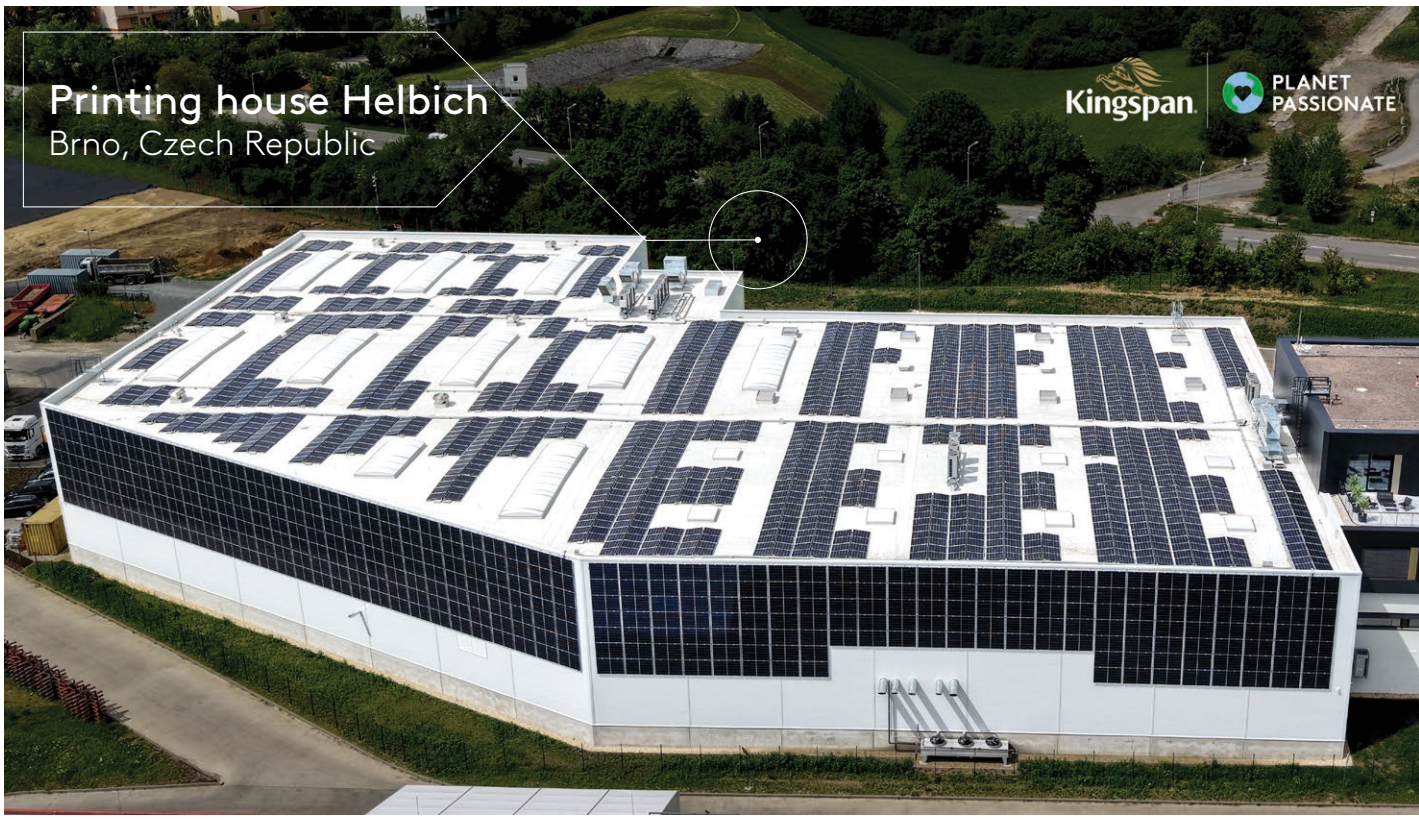

Vest
Zlín, Czech Republic

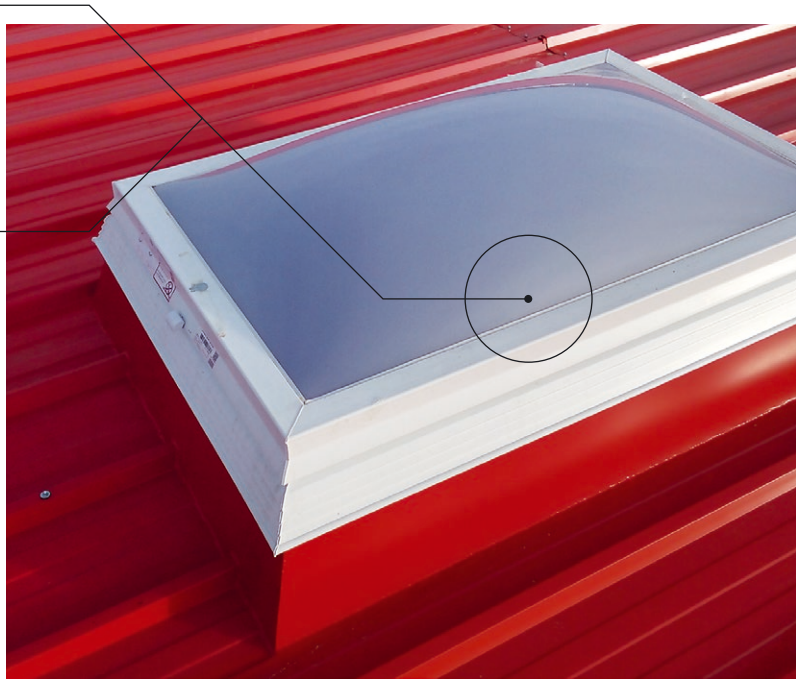



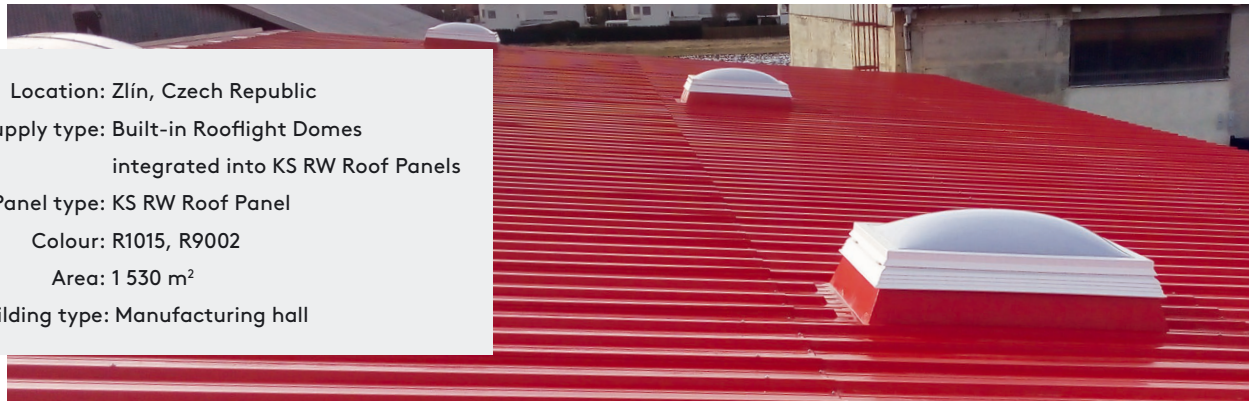

Location: Zlín, Czech Republic
Supply type: Built-in Rooflight Domes
integrated into KS RW Roof Panels
Panel type: KS RW Roof Panel
Colour: R1015, R9002
Area: 1 530 m²
Building type: Manufacturing hall

3rd Edition | 06/2026

Romania & Greece

Ion Coteata
Kingspan SRL
Str. Grigore Mora nr.22
11887 sect.1, Bucharest, Romania

Tel. (Office): 021 231 50 89
Tel. (Ion Coteata): +40744482941

E-mail: info@kingspan.ro
ion.coteata@kingspan.com

Web: www.kingspan.com/ro-ro

Scan the QR code or click here to access the latest version of this document.

For information about our product range, please contact your sales representative or visit www.kingspan.com. Although we take the greatest care in preparing our catalogues and brochures, we cannot accept responsibility for printing errors or inaccuracies. Users are responsible for verifying the suitability of the product for their specific requirements and for ensuring compliance with all applicable laws and regulations. We reserve the right to update this document and all other information materials at our discretion and without prior notice. ® Kingspan and the lion logo, as well as QuadCore®, are registered trademarks of Kingspan Group plc in the Czech Republic and other countries. All rights reserved.

Information on third-party products, including Kingspan-branded products, is considered correct as of the date of publication of this document. Information on third-party products has been provided and approved by the respective suppliers in cooperation with Kingspan's Accessories Department. Although the Accessories Department has taken due care in presenting this information, Kingspan, a.s. accepts no responsibility for the completeness, accuracy or quality of information provided by third parties.

The use of this information is entirely at the user's discretion and responsibility. For the latest and most detailed information about the products, please contact the Accessories Department directly: Jakub Veselý, +420 702 025 770, jakub.vesely@kingspan.com