SERVICE MANUAL

PLACE SERIAL NUMBER LABEL HERE

BAY TEK entertainment

FACTORY CONTACT INFORMATION

BAY TEK ENTERTAINMENT
Pulaski Industrial Park
1077 East Glenbrook Drive
Pulaski, WI 54162 USA

SIGN UP TO RECEIVE OUR E-MAILS!
Stay up to date on the latest game information, new products launches, early notification of parts specials, updates of retro fit parts, software upgrades, best practices and more!

Visit baytekent.com and enter your email to sign up!

You can also register your new game at baytekent.com/register

SALES
Phone: (920) 822-3951
Fax: (920) 822-8936
Email: baytek.sales@thevillage.bz

PARTS
Phone: (920) 822-3951 Ext 1101
Email: baytek.parts@thevillage.bz

SERVICE
Phone: (920) 822-3951 Ext 1102
Email: baytek.service@thevillage.bz

Open Monday - Friday
8 AM - 5PM C.S.T.

All games are proudly manufactured at our factory in Pulaski, Wisconsin, USA

TABLE OF CONTENTS

FACTORY CONTACT INFORMATION 2
WELCOME TO PIANO KEYS 4
HOW TO PLAY 5
GAME SPECIFICATIONS 6
SAFETY PRECAUTIONS 6
GAME SET UP ..... 7 - 10
ADJUSTABLE MARQUEE 11
CARD SWIPE INSTALLATION 12
MAIN MENU FUNCTIONS 13
    VOLUME & ATTRACT 14
GAME SETTINGS 14
PAYOUT SETTINGS 15
    SONGBOOK SETTINGS 16
    STATISTICS 17
    DIAGNOSTICS 17
DIPSWITCH SETTINGS 18
CIRCUIT BOARD LAYOUT 19
WIRING DIAGRAMS ..... 20 - 24
DIAGNOSTICS ..... 25 - 29
POWER SUPPLY DIAGNOSTICS 30
BILL ACCEPTOR DIAGNOSTICS 31
HOW TO ACCESS KEY SENSORS 32
HOW TO CHANGE MONITOR ..... 33 - 35
DOOR BOARD PINOUT 36
AVAILABLE BLANKING PLATES 36
MONITOR SETTINGS 37
PARTS LIST 38
DECAL DIAGRAM 39
PARTS PICTURES 40
MAINTENANCE LOG 41
TECHNICAL SUPPORT / WARRANTY 42

WELCOME TO PIANO KEYS

Congratulations on your purchase!

Please take a moment to read through this manual and be sure to contact us if you have any questions, or would like more information.

Thank you for your purchase! Your business is important to us and we hope you enjoy this game as much as we do!

Your Friends at Bay Tek Entertainment

Please inspect the game for any damaged, loose, or missing parts.

If damage is found, please contact your freight carrier first.
Then, contact Bay Tek Entertainments' Service Department at
(920) 822-3951 Ext. 1102
Or email us at baytek.service@thevillage.bz for further assistance.

SAFETY PRECAUTIONS

NOTICE

Modifications to the mechanical, electrical and structural components of this game may void its compliance certifications.

This appliance is suitable for INDOOR, DRY locations only.

DANGER

DO NOT perform repairs or maintenance on this game with the power ON.
Unplug the unit from the wall outlet or shut off the power strip located inside the cabinet.

WARNING

Use of flammable subtances can cause sever burns or serious injury.
Always use NON-FLAMMABLE solvents for cleaning. DO NOT use gasoline kerosene or thinners.

CAUTION

Lifting heavy objects can cause back, neck or other injuries. Be sure adequate lifting and moving devices are available when unloading, unpacking and moving this game.

ATTENTION

Be sure the electrical power matches the game requirements. See the serial number located on the back of the game cabinet. Always plug into a grounded circuit. If the supply cord is damaged, it must be replaced by an approved cord or assembly provided by the manufacturer.
A shielded power cable must be used for the game to retain EU/EMC compliance.

IN CASE OF EMERGENCY

UNPLUG THE POWER CORD.
The power cord must be accessible at all times in case of an emergency.

WARNING

This unit is capable of producing sound levels hazardous to human hearing.
Consult local sound regulations and adjust volume accordingly.

GAME SPECIFICATIONS

WEIGHT		
NET WEIGHT	550 lbs.	249 kg
SHIP WEIGHT	600 lbs.	272 kg

GAME DIMENSIONS		
WIDTH	34"	87 cm
DEPTH	54"	138 cm
HEIGHT (Adjustable to 84 3/4")	107"	272 cm

OPERATING TEMPERATURE	
FAHRENHEIT	45 - 80 F
CELSIUS	7.2 - 26.7 C

SHIPPING DIMENSIONS	
WIDTH	40"
DEPTH	60"
HEIGHT	90"

POWER REQUIREMENTS			
INPUT VOLTAGE RANGE	100 to 120 VAC		220 to 240 VAC
INPUT FREQUENCY RANGE	50 Hz		60 Hz

MAX OPERATING CURRENT
2.8 AMPS @ 120 VAC / 1.8 AMPS @ 220VAC

HOW TO PLAY

Swipe card, or insert credits to start game.

Follow the colored squares on the screen to play on the oversized keys.

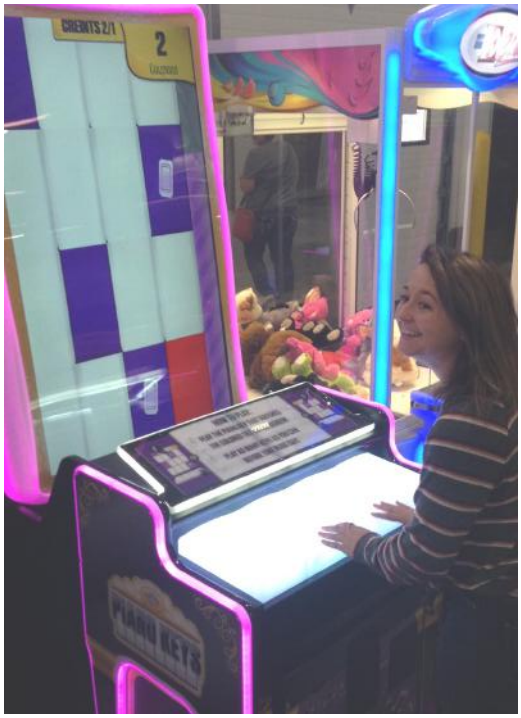

The faster and more accurately you play, the more tickets you win!

Play again to beat your high score.

PIANO KEYS GAME SETUP

The game will arrive on one pallet. Please inspect the pallet for shipping damage and report immediately to the freight company if any damage is found.

Unbox the pallet and remove the box from the top of the player console. This is the marquee.

Please unbox the marquee and proceed to assembly instructions.

Tools Needed:

1 step ladder (6-8 foot)
2 people

2 Phillips screwdriver bit
Diagonal Cutting Pliers (Snips)

T-30 Torx Bit

Important:

The marquee of game is small, but bulky and heavy. We recommend one person on the ladder, and a second person to lift the marquee up to the top of the game.

Remove the keys from the small plastic bag taped to the top console.

Open the front door using a H95 key.

Remove the lag screw using a T-30 Torx bit

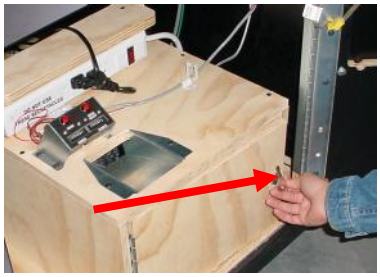

Open the coin box door using a E00 key.

Remove the hardware kit from the coin box.

Close and lock coin box door, remove key to allow the front door to close fully.

Unlock and remove the back door of the cabinet.

Remove the lag screw using a T-30 Torx bit.

The cabinet can now be removed from the pallet.

GAME SETUP

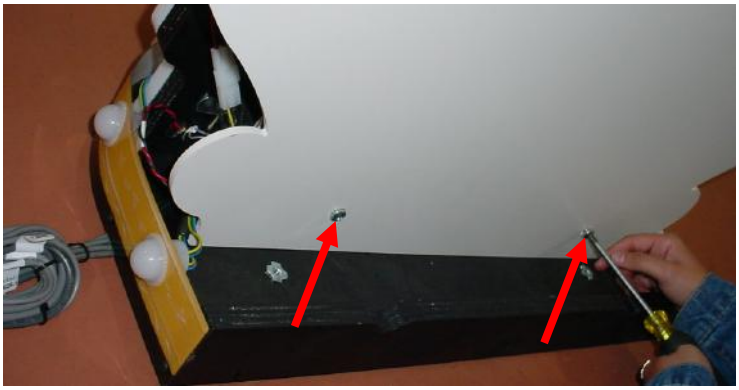

Marquee Preparation Work:
Locate the 2 of part # A5BOPH301 Philips head bolt. (1/4-20 X 5/8" with star washer)

Attach the flat artwork to the rear of the marquee using a #2 Phillips head screwdriver.

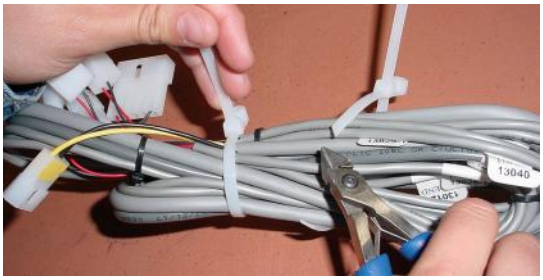

Remove the 2 white plastic tie wraps by carefully cutting each with a diagonal cutting pliers (snips).
Be careful not to cut the cables.

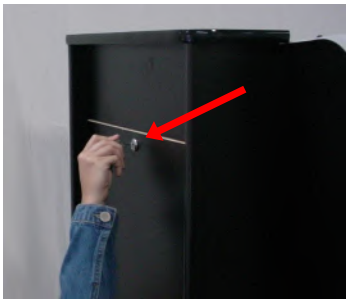

Unlock and remove upper rear door using a H95 key.
Set the door aside for later installation.

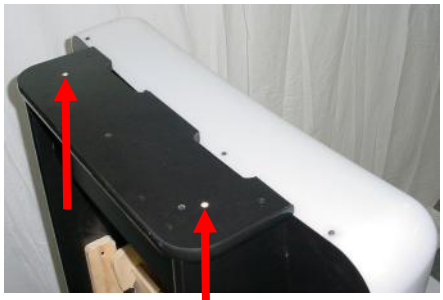

Note: The bolts to attach marquee will thread from under the top of game cabinet - up into the marquee.

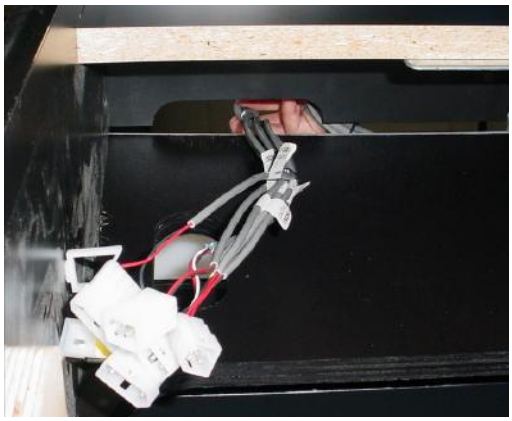

Raise the marquee to the top of the game.
From the back of the cabinet, feed the cable harness down the left side hole into the game cabinet.

GAME SETUP

Position the marquee on the top of the game as shown:

Locate the hardware needed to install marquee to top of game:
2 each of:

A5BOPH320	A5WAFL060	A5WASI020
1/4 - 20 by 1 1/2”	1/4” Flat Washer	1/4” Split Washer

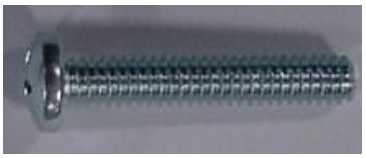

Place a split washer on the bolt,
then a flat washer as shown:

Install the assembled bolt upward from the game cabinet up into the marquee using a #2 Phillips head screwdriver.

Tighten both bolts to secure the marquee.

Connect the marquee cable harness to the game harness by plugging in the 6 connectors as shown.

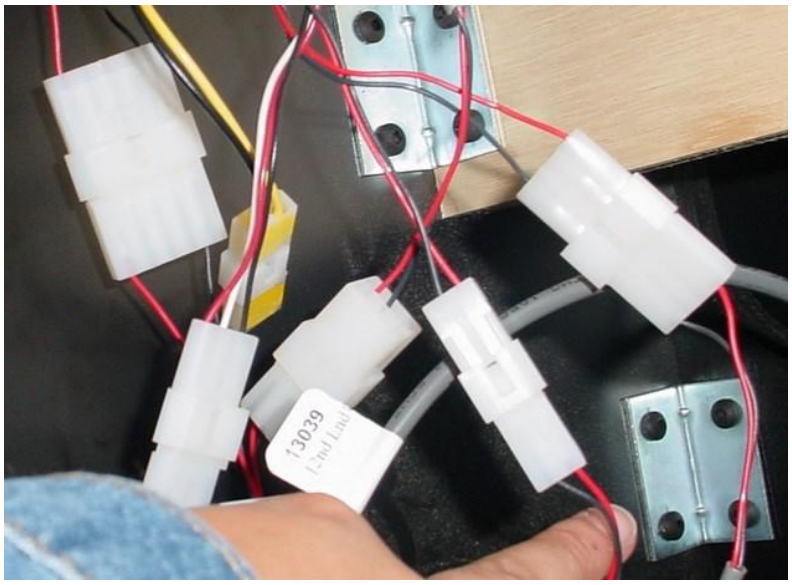

Clip the cable harness into the plastic wire saddle along the left side of the back of game cabinet.

GAME SETUP

Peel away the protective film from the front of monitor cover.

Plug in game:
There are 2 options:

Option #1: Power Cord from Back of Cabinet
Unclip the power cord from back of game, carefully extend power cord and plug into the wall.

Option #2: Power Cord from Bottom of Cabinet
Unlock and remove lower rear door using a H95 key
Unclip power cord from back of game and push plug back inside the cabinet.
Bring power cord out through the hole in the bottom of game as shown and plug into the floor.

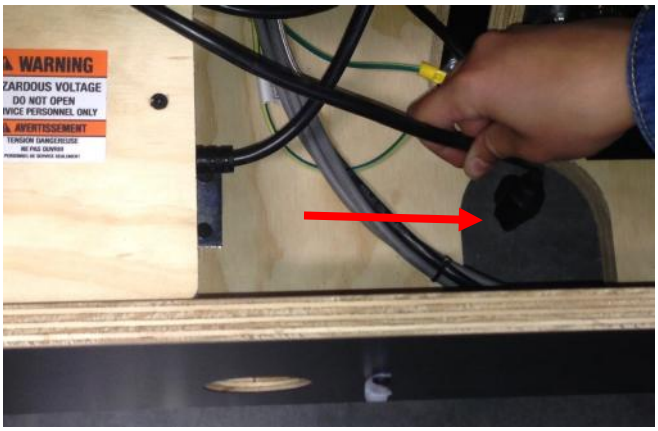

Power on game:
Open the front door and turn on the rocker switch on the power strip.

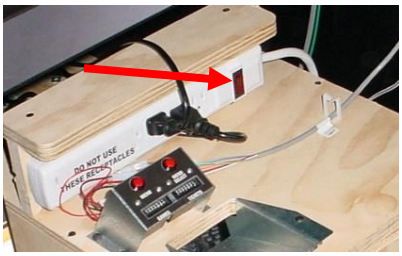

The game is now set up and ready for play!
Enter menu to adjust settings to your location specific price per play and ticket payout.

ADJUSTABLE MARQUEE

Components of the marquee can be removed to accommodate a lower ceiling height.

Refer to chart below for available options:

TOTAL HEIGHT OF GAME	
8’ 11” 107” 272 cm	
8’ 3” 99” 252 cm	
7’ 11” 95” 242 cm	
7” 3/4” 84 3/4” 213 cm	

CARD SWIPE SYSTEM INSTALLATION

The Piano Keys game is pre-wired with a UCL (Universal Card Link) connector to accept Card Swipe systems from many different manufactures.
Please follow these instructions to make full use of this capability.

Option #1:
Card swipe systems may come with a standard 9 pin Molex connector. This is the UCL connector.
Simply plug this connector into your card swipe reader.

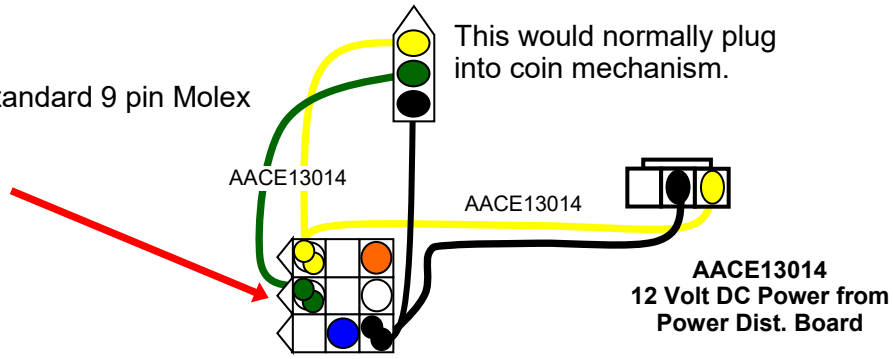

Option #2:
If your card swipe systems does not have a standard 9 pin Molex connector, then you will have to splice wires into the AACE13014 harness.

Black wire is ground. (common)
Green wire is coin signal.
Yellow wire is +12 Volts DC

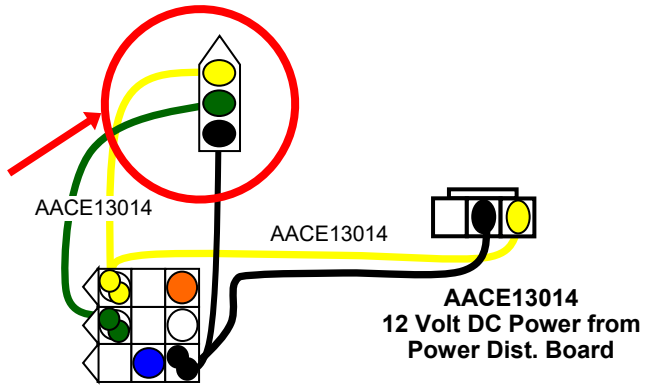

Notes:
- Many card swipe systems have a voltage threshold that can be adjusted in the card swipe menu. Please set this “Game Drive Threshold” to 2 Volts.

Menu Changes
Enter menu, go to “Payout” Menu
Verify “Credits Per Play” set to 1
Verify “Swipe Prompt” set to “Enabled”

Go to “Game” Menu
Set “Redemption Type” to desired option

Check dipswitches on the I/O Aux Board in the front of game. Verify Dipswitch # 5 ON

Please contact Baytek Games if any further questions. (920) 822-3951 Ext. 1102

MAIN MENU FUNCTIONS

The Menu and Menu Select buttons are located inside the front door.

Hold the MENU button down for 1 second to open the main menu on the monitor.

Press MENU to scroll through the options, and MENU SELECT to change the settings.

MAIN MENU		
CLEAR TICKETS & CREDITS	PRESS MENU SELECT BUTTON 3 TIMES TO CLEAR	
VOLUME & ATTRACT	PRESS MENU SELECT TO ENTER VOLUME SETTINGS	
GAME SETTINGS	PRESS MENU SELECT TO ENTER GAME SETTINGS	
PAYOUT SETTINGS	PRESS MENU SELECT TO ENTER PAYOUT SETTINGS	
SONGBOOK SETTINGS	PRESS MENU SELECT TO ENTER SONGBOOK SETTINGS	
STATISTICS	PRESS MENU SELECT TO ENTER STATISTICS	
DIAGNOSTICS	PRESS MENU SELECT TO ENTER DIAGNOSTIC	
RESET FACTORY DEFAULTS	PRESS MENU SELECT BUTTON 5 TIMES TO RESET TO FACTORY DEFAULTS	
MUTE	ON (No sound from game)	OFF
EXIT	PRESS MENU SELECT BUTTON TO EXIT MENU	

*** Default settings are highlighted in yellow

Software versions are shown on the bottom of the main menu screen.

PC Version: 1.0.3
Light Board Version: 1.3
Door Board Version: 1.6

If one shows “Not Found” then the circuit board is not communicating to motherboard.

Door Board Version: Not Found

VOLUME & ATTRACT SETTINGS

ATTRACT VOLUME	0 (No attract volume)		TO	10	DEFAULT: 4
GAME VOLUME	0 (No game volume)		TO	10	DEFAULT: 6
ATTRACT TIMING	DISABLED (Never play attract music)	1 Minute	TO	30 Minutes	DEFAULT: 3 Minutes

BACK	PRESS MENU SELECT TO RETURN TO MAIN MENU

GAME SETTINGS

GAME TIME	10 Seconds		TO In increments of 1 second	60 Seconds	DEFAULT: 20 Seconds
BAD NOTE PENALTY Timed delay if wrong key is pressed	0.0 Seconds No Penalty	0.1 Seconds	TO In increments of 0.1 second	2 Seconds	DEFAULT: 0.6 Seconds
GAME TIMEOUT Amount of time before game timer starts	DISABLED Game will wait forever until first key is pressed	1 Second	TO In Increments of 1 second	30 Seconds	DEFAULT: DISABLED
REDEMPTION TYPE	TICKETS		COUPONS	POINTS	DEFAULT: TICKETS

BACK	PRESS MENU SELECT TO RETURN TO MAIN MENU

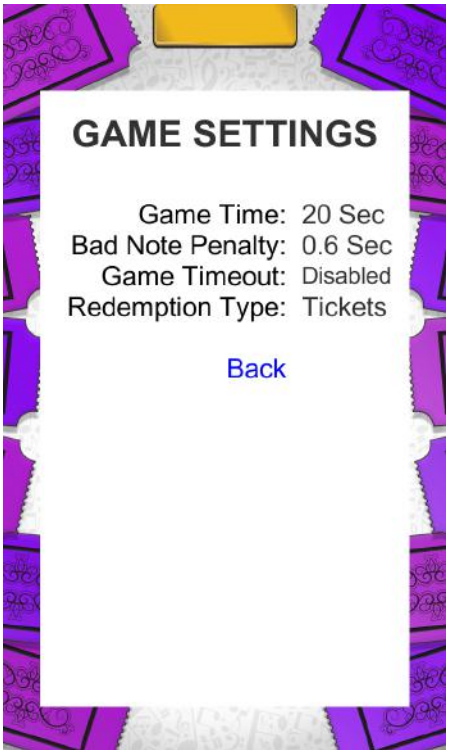

PAYOUT SETTINGS

CREDITS PER PLAY	FREE PLAY	1	TO In increments of 1	20	DEFAULT: 1
SWIPE PROMPT	ENABLED Shows "Swipe Card to Play"		OR	DISABLED Shows "Credits"	DEFAULT: ENABLED
TICKET PATTERN	Refer to Chart Below				DEFAULT: 9
FIXED TICKETS Fixed tickets given per game. This overrides "Ticket Pattern"	DISABLED	1	TO In increments of 1	30	DEFAULT: DISABLED
MERCY TICKETS Tickets given if no tickets are won	DISABLED	1	TO In increments of 1	10	DEFAULT: DISABLED

BACK	PRESS MENU SELECT TO RETURN TO MAIN MENU

TICKET PATTERNS			
PATTERN	**TICKETS PER**	**KEYS HIT**	**AVERAGE TICKETS** (AT 20 SECOND GAME TIME)
1	1	10	4
2	1	5	8
3	1	3	13
4	2	5	16
5	1	2	20
6	4	7	23
7	5	8	25
8	4	6	27
9	3	4	30
10	7	8	35
11	5	4	50
12	7	4	70

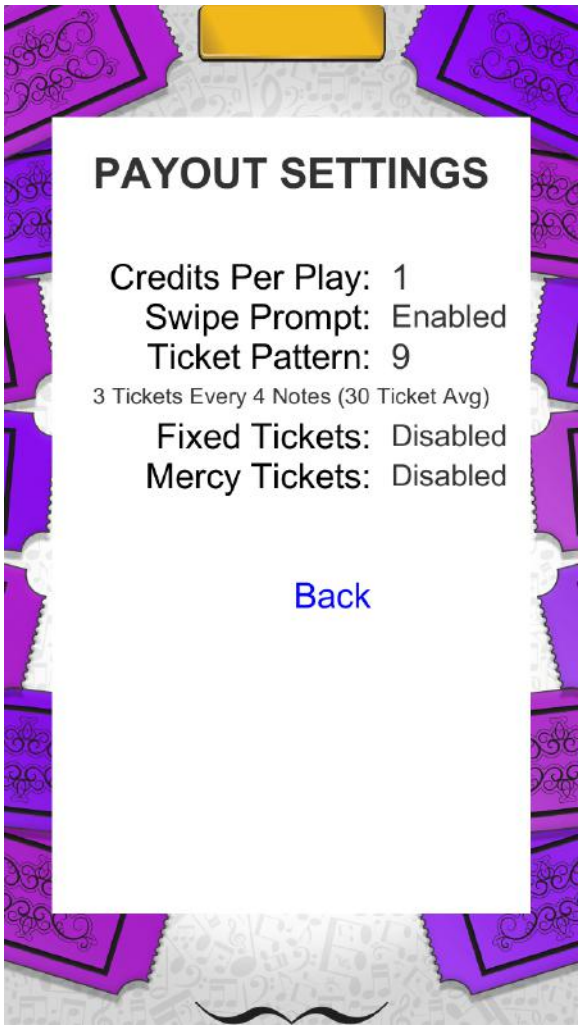

SONGBOOK SETTINGS

Songs used in game play can be Enabled or Disabled in this menu.

AMAZING GRACE	ENABLED	DISABLED
AULD LANG	ENABLED	DISABLED
BABA BLACK SHEEP	ENABLED	DISABLED
CANCAN	ENABLED	DISABLED
CHICKEN DANCE	ENABLED	DISABLED
CHOPSTICKS	ENABLED	DISABLED
FUR ELISE	ENABLED	DISABLED
HAPPY BIRTHDAY	ENABLED	DISABLED
HARK ANGEL	ENABLED	DISABLED
LONDON BRIDGES	ENABLED	DISABLED
MARY LITTLE LAMB	ENABLED	DISABLED
ODE TO JOY	ENABLED	DISABLED
OLD MCDONALD	ENABLED	DISABLED
STAR SPANGLED BANNER	ENABLED	DISABLED
TAKE ME OUT	ENABLED	DISABLED
TEN GREEN BOTTLES	ENABLED	DISABLED
THIS OLD MAN	ENABLED	DISABLED
TWINKLE TWINKLE	ENABLED	DISABLED
WORKIN ON THE RAILROAD	ENABLED	DISABLED

BACK	PRESS MENU SELECT BUTTON TO RETURN TO MAIN MENU

STATISTICS

TOTAL GAMES PLAYED	Reports the actual games played since last reset
TOTAL TICKETS	Reports the actual tickets out since last reset
AVERAGE TICKETS PER GAME	Reports the current average tickets per game since last reset

RESET STATS	PRESS MENU SELECT BUTTON 5 TIMES TO RESET STATISTICS
RESET HIGH SCORES	PRESS MENU SELECT BUTTON 3 TIMES TO RESET HIGH SCORES
BACK	PRESS MENU SELECT TO RETURN TO MAIN MENU

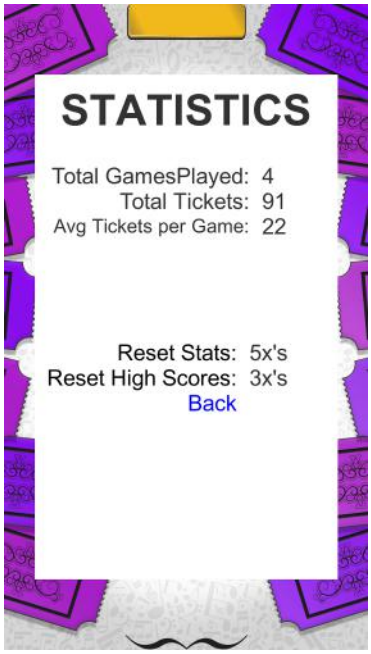

DIAGNOSTIC

LEFT KEY INPUT	UP	DOWN (When key is pressed)
LEFT MIDDLE KEY INPUT	UP	DOWN (When key is pressed)
RIGHT MIDDLE KEY INPUT	UP	DOWN (When key is pressed)
RIGHT KEY INPUT	UP	DOWN (When key is pressed)
DOOR BOARD INPUTS	0	
	This value will change when low ticket switch and menu buttons are pressed.	

TICKET DISPENSE	TEST Press Menu Select Button to dispense 1 ticket
BACK	PRESS MENU SELECT BUTTON TO RETURN TO MAIN MENU

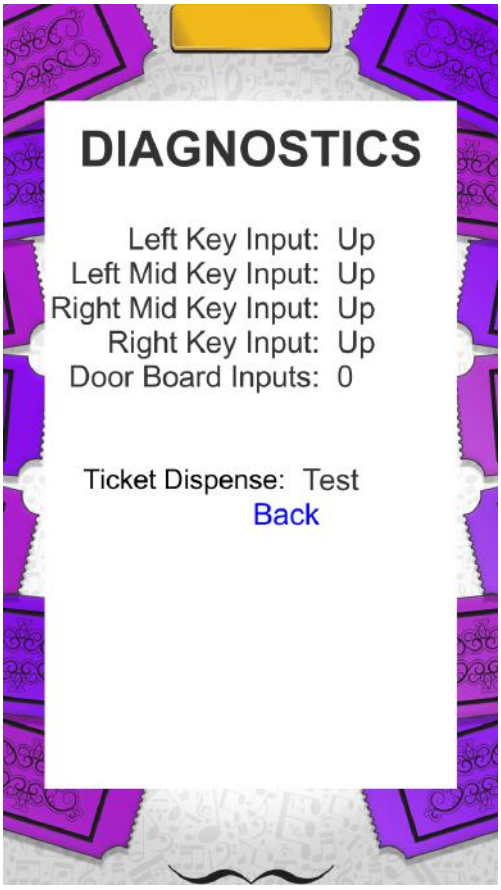

DIPSWITCH SETTINGS

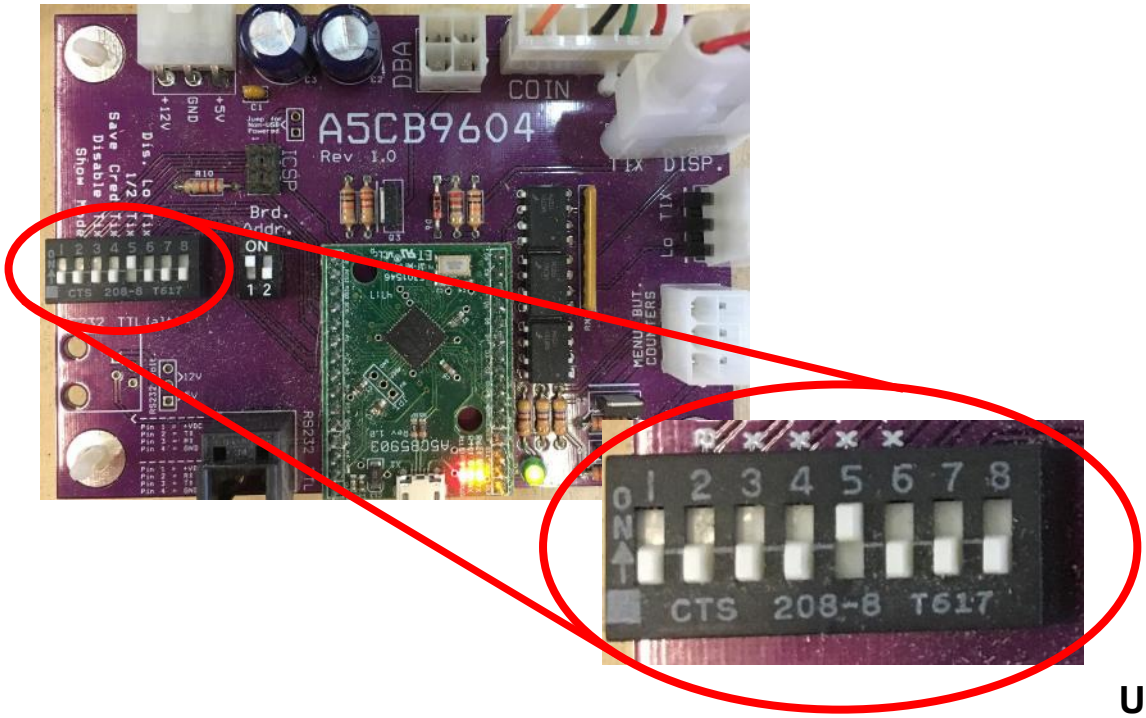

Note:
UP IS ON

SWITCH	DESCRIPTION	ON	OFF
1	**SHOW GAME** Does not dispense tickets and clears all accumulated credits		X
2	**AMUSEMENT ONLY** Does not dispense tickets		X
3	**NJ LOCKOUT** Saves tickets owed and unused credits after a power loss		X
4	**1/2 TICKET PAYOUT** Dispenses 1/2 the amount of tickets as shown on screen. It will round up odd amounts of tickets		X
5	**DISABLES LOW TICKET INPUT** Disables the low ticket message on screen. This option should be enabled when using a card swipe system	X	
6	**NOT USED**		
7	**NOT USED**		
8	**NOT USED**		

CIRCUIT BOARD LAYOUT

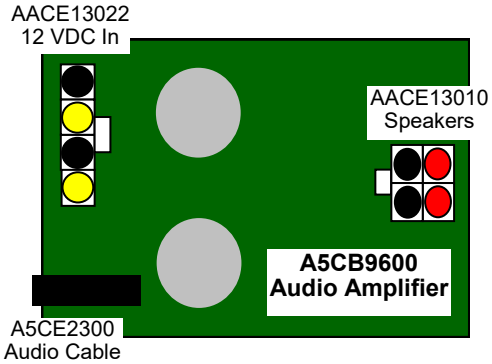

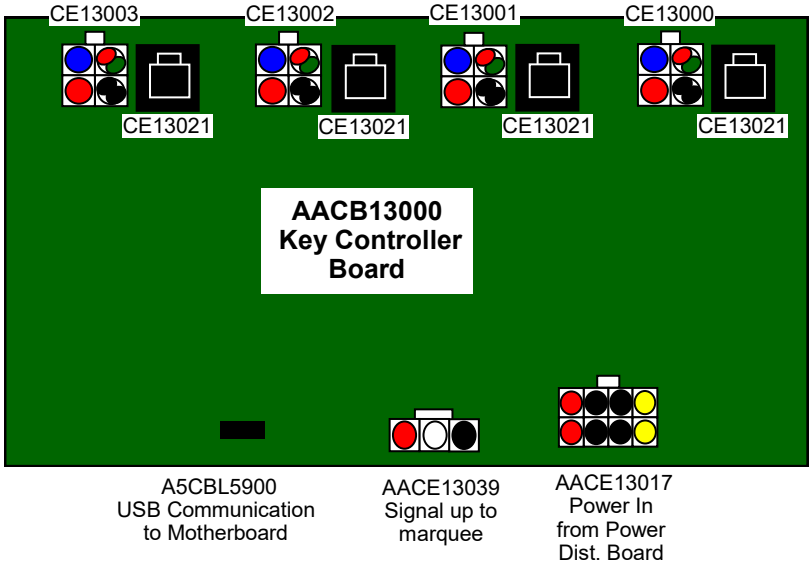

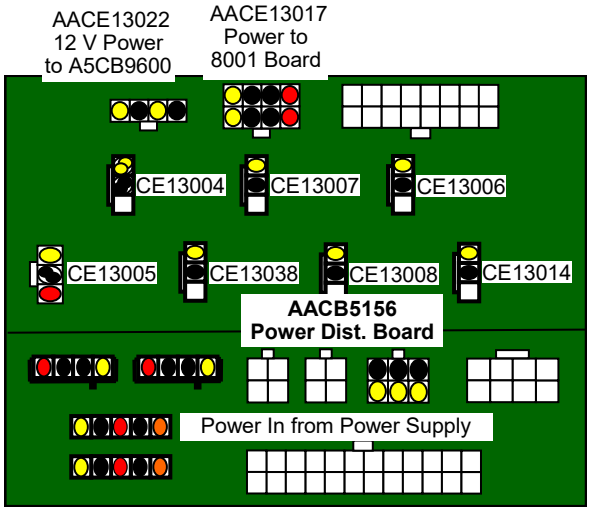

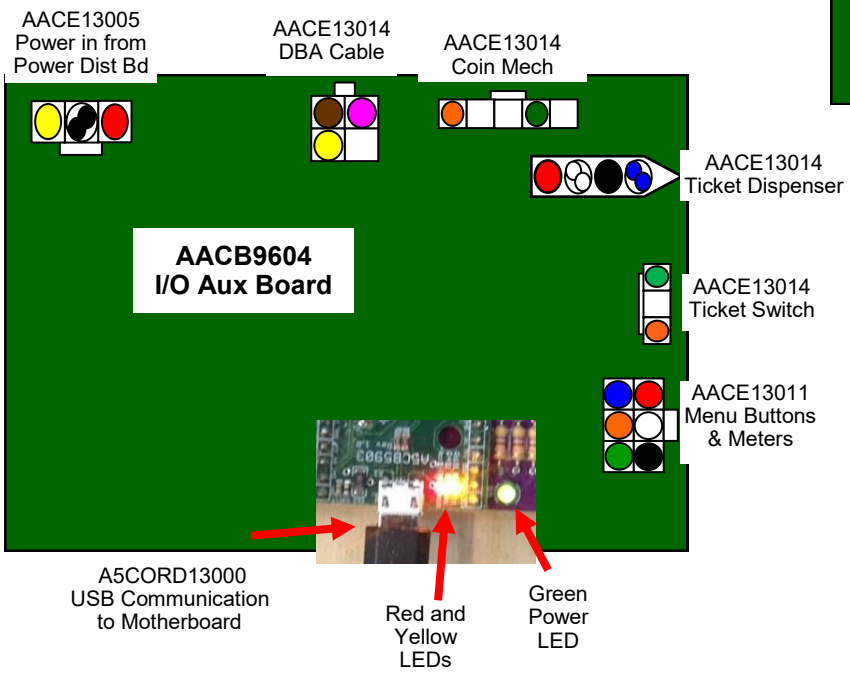

WIRING DIAGRAM

I/O AUX BOARD, COIN MECH, MENU & COUNTER

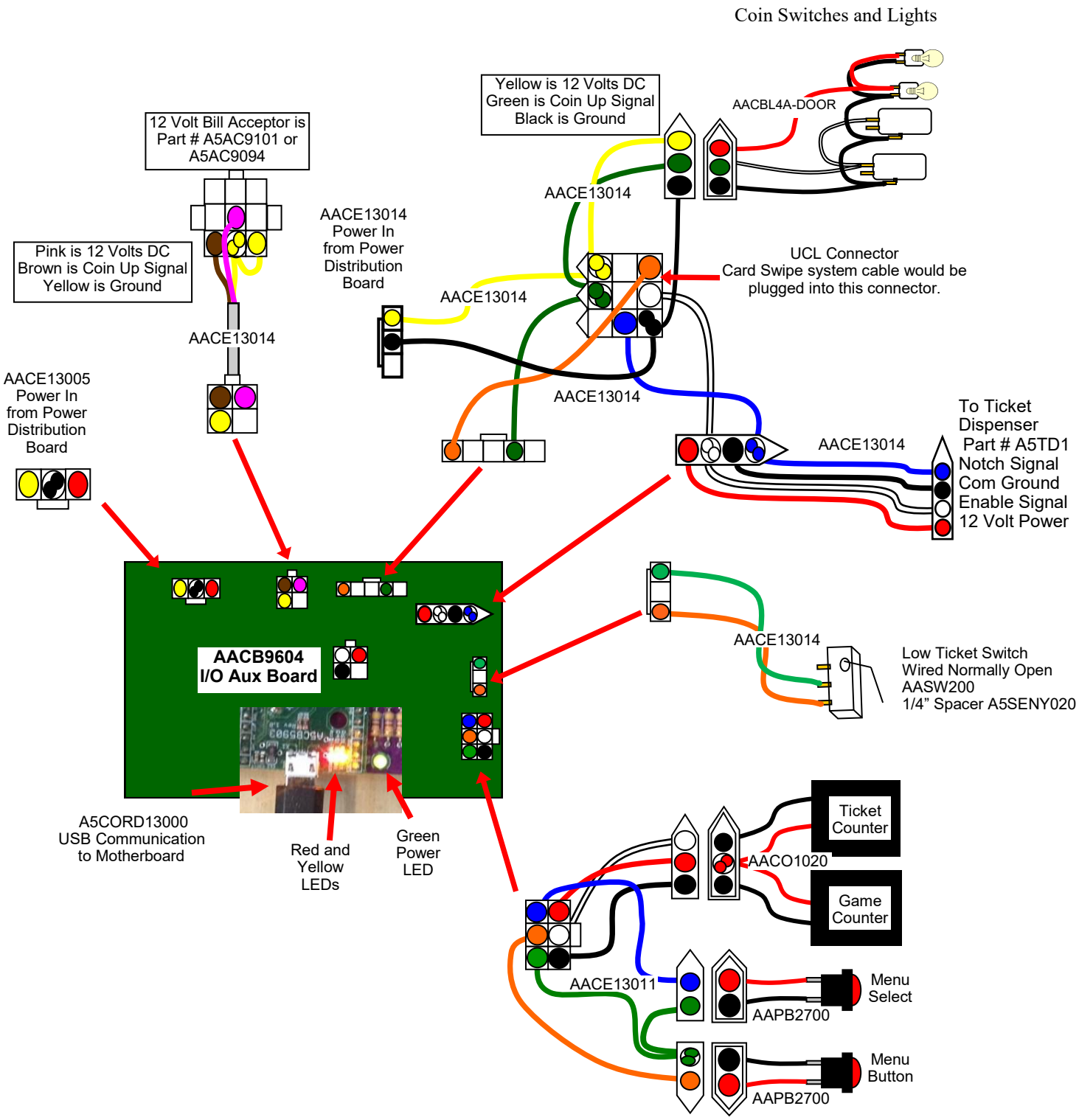

WIRING DIAGRAM

KEY SENSORS AND KEY LIGHTS

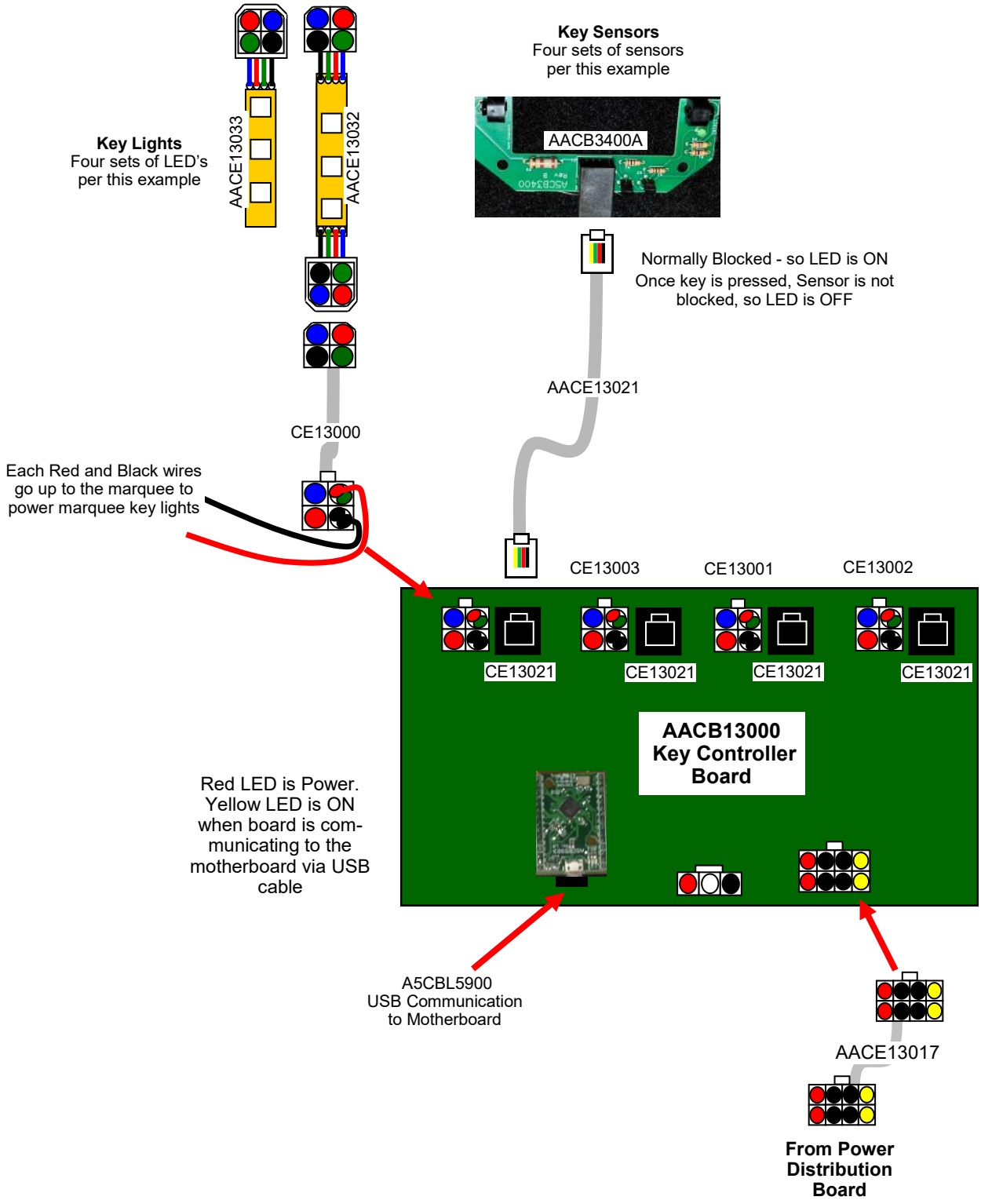

WIRING DIAGRAM

MARQUEE LIGHTS

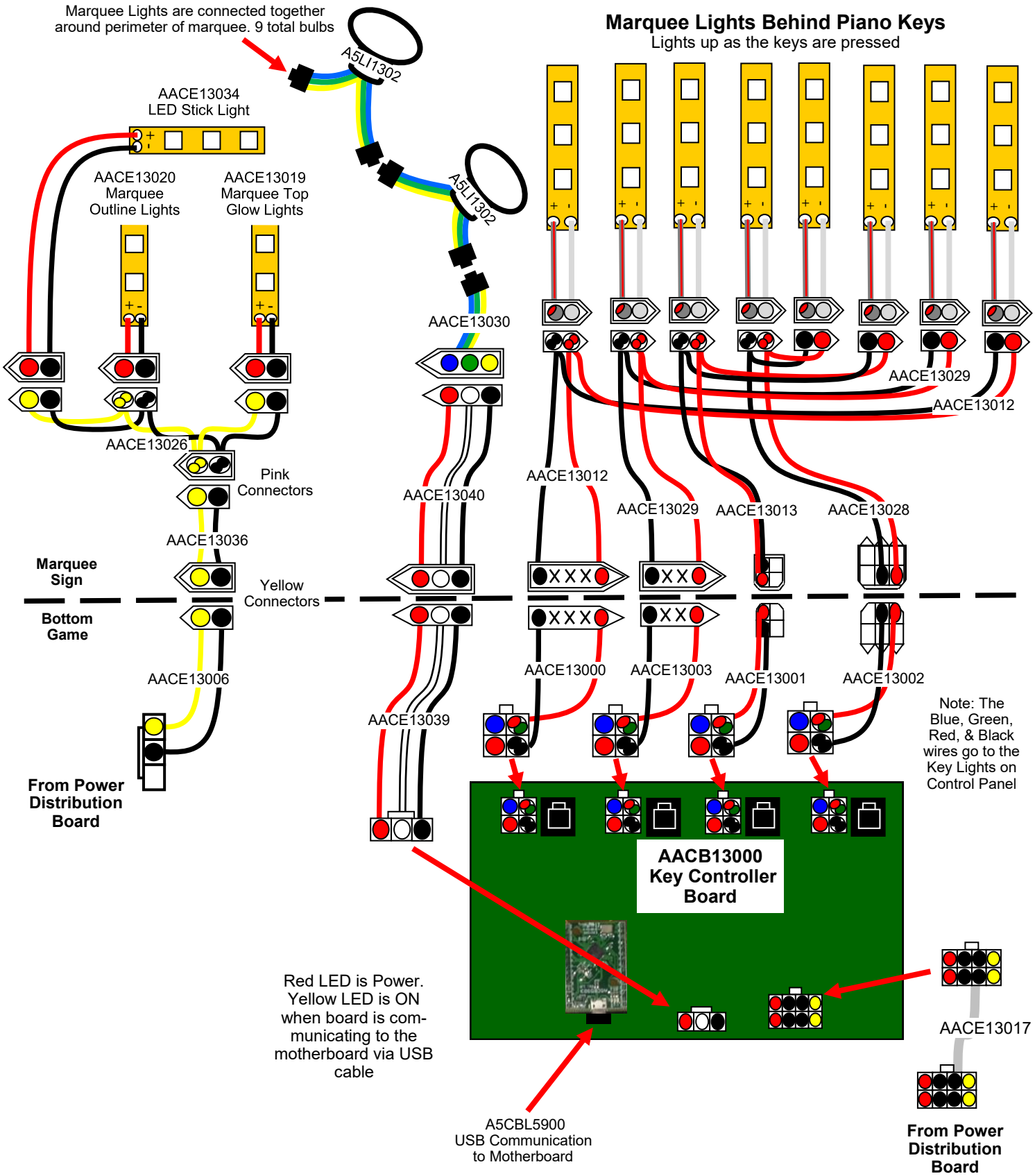

WIRING DIAGRAM

POWER DISTRIBUTION POWER OUT

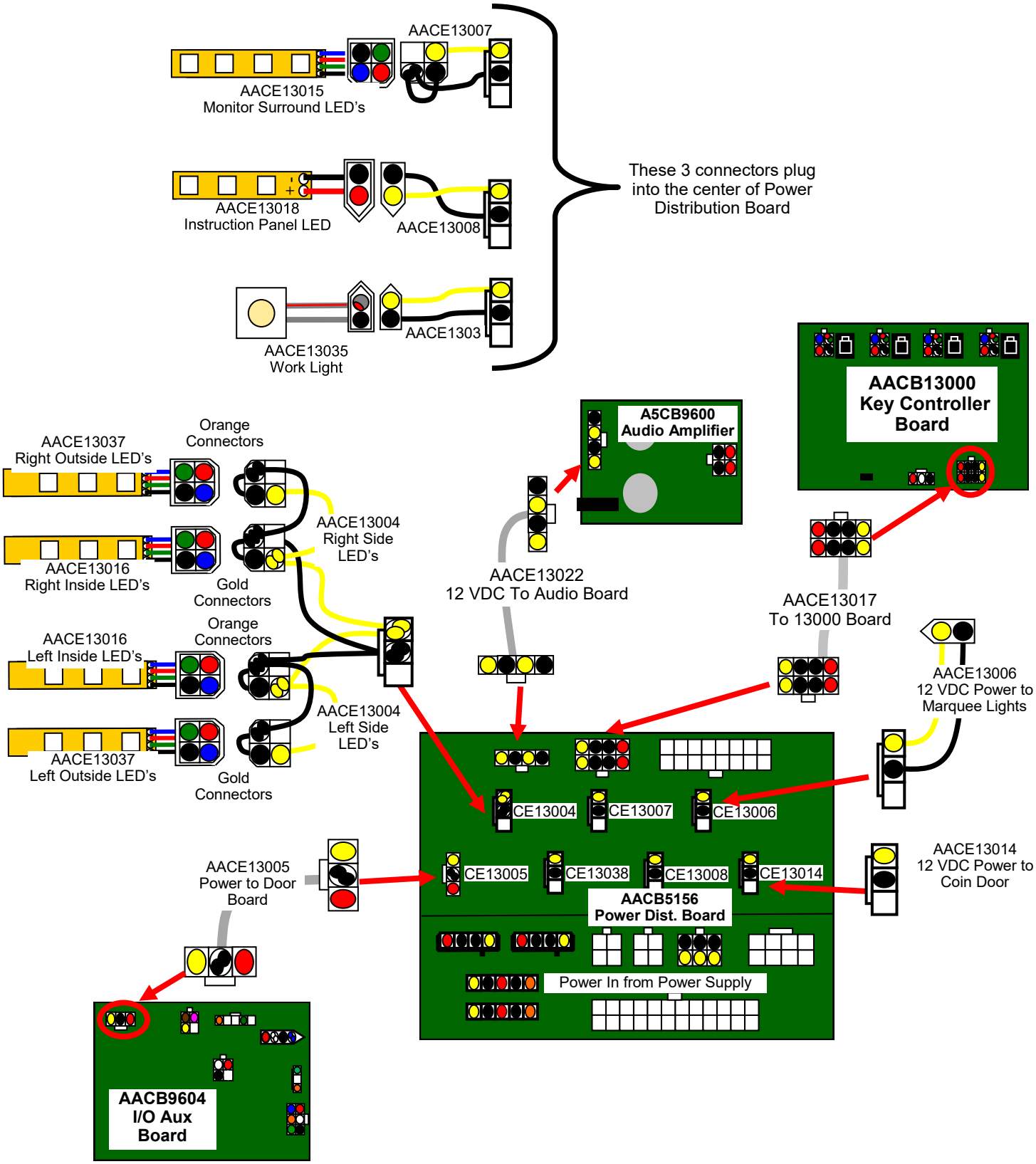

WIRING DIAGRAM

SPEAKERS AND MOTHERBOARD COMMUNICATION

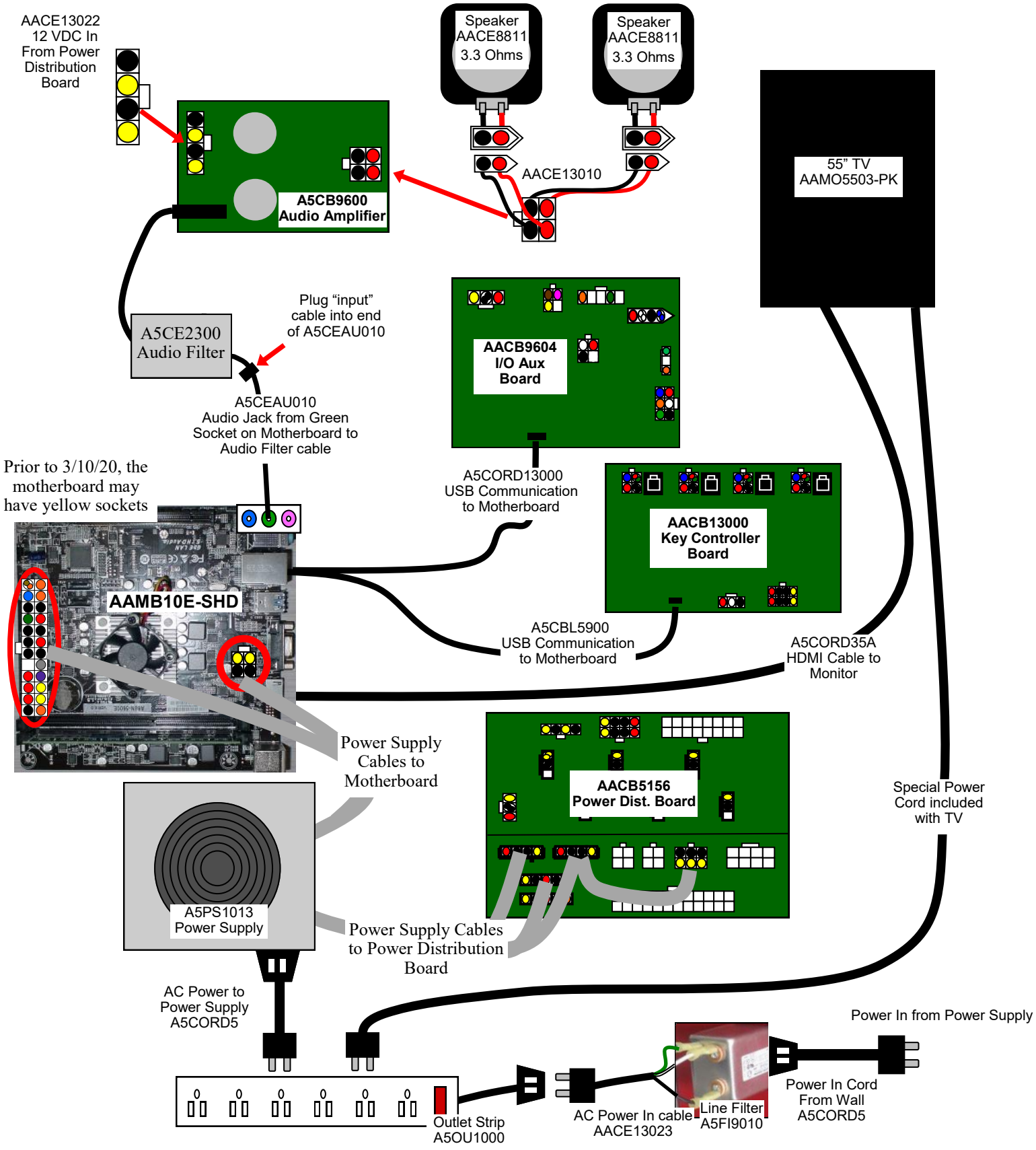

TROUBLE SHOOTING GUIDE

Troubleshooting Strategy

Use common sense and a systematic method of troubleshooting to determine the exact problem, probable cause and remedy. Use the process of elimination to find the faulty component. Always check for the simple and obvious causes first such as unplugged, loose or broken wires and bad sensors, bent, pinched, stuck or jammed components.

Problem	Probable Cause	Remedy
No power to the game. **No lights on at all.**	Unplugged. Circuit breaker tripped. Line Filter Faulty. Power strip faulty. Red rocker switch should be illuminated. Faulty cable/power supply	Check wall outlet. Reset power strip breaker switch or building circuit breaker. Replace Line Filter (Part # A5FI9010) Swap plug positions on power strip, replace if needed. Part # A5OU1000 Refer to wiring diagram. Check cable AACE13023 to power strip. Refer to Power Supply diagnostic section to diagnosis a short not allowing the power supply to turn On.
Monitor powers on, **but everything else off.** **(Power Supply not ON)**	Power supply unplugged. Rocker Switch. Power supply shutting down because of 12 Volt overload. Faulty power supply. Faulty Power Dist Board	Ensure unit is plugged into power strip. Make sure rocker switch is set ON. See power supply diagnostics to isolate bad component. A bad light or 12 volt short would cause this. See Power Supply Diagnostic section. Bottom half of board is the power into board, the top half is the power going out of the board. Replace Power Distribution Board (AACB5156) if there is power in, but no power out.
Dollar Bill Acceptor not functioning. Ensure Bill Acceptor is set to "Always Enable" **Important : Only 12 Volt DC DBA is to be installed.** Model # AE 2454 U5E or AE-2654-U5	Check for power to Bill Acceptor. Dirt or debris in acceptor slot. Pinched, broken, or disconnected wiring. Bill acceptor problem. Part # A5AC9101 or A5AC9094	Acceptor should cycle stacker at game power up. If not, check cable connections. Refer to "How to Clean Bill Acceptor" Or clean with bill reader cleaning card. (A5CC9000) Check wiring from bill acceptor to NewGen Board. (AACE13014) Repair or replace wiring harness. Check connector on I/O Aux Board Make sure wires are secure in connectors. Refer to troubleshooting section of dollar bill acceptor manual included with this game or the diagnostics label of the back of the unit.
Menu Buttons do not work.	Swap connectors at the 2 buttons. Pinched, broken, or disconnected wiring Main board faulty.	Replace button if problem stays with button.(AAPB2700) Inspect crimp to ensure good connection. Check connections from menu buttons to I/O board. Check continuity on wires. (AAPB2700, AACE13011) Replace I/O Aux Board. (AACB9604)

TROUBLE SHOOTING GUIDE

Problem	Probable Cause	Remedy
Meters do not work. Game meter will click at the start of the game. Ticket meter will click as tickets come out of game and notch is "seen" by dispenser.	Ensure correct number of tickets are being dispensed Disconnected, loose or broken wires. Faulty counter.	Check ticket values in menu. Test Ticket Dispense in Diagnostic menu. Refer to Tickets not dispensing troubleshooting section. Check connections to I/O board. Cables #'s AACE13011 and AACO1020 Replace counter. AACO1020.
Game not coining up. Refer to "Card Swipe System Installation" if installing card system	Check for I/O board USB cable communication. Door Board Version: Not Found Ensure game makes sound when coin switch is triggered. Game set to large amount of credits per game.	Enter menu and ensure version is shown If version is "Not Found", refer to "I/O Aux Board Issue" diagnostic Section. Check coin switches—both should be wired normally open. If one switch is "closed" the other will not work either. Check wiring to I/O Aux Board. (AACBL4A-DOOR, AACE13014) Check Game Setup Menu. Ensure Credits per Game is set. Default = 1
No Sound Motherboard creates sound, Audio board amplifies it. 	Volume set to zero in menu. Ensure "Mute" is set to OFF 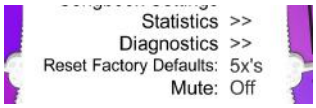 Disconnected, loose or broken wires. Faulty speaker.	Enter Volume & Attract Menu and verify: Game Volume & Attract Volume is not zero Check connections and reseat audio cable from motherboard to Audio Amplifier board to speakers. Cables # AACE8811, AACE13010, A5CE2300 and A5CEAU010 to green socket. Ensure 12 volts at AACE13022 cable from power supply. Unplug audio jack cable (A5CEAU010) from motherboard, plug into MP3 player and see if music is amplified and comes out of speaker. If Yes - then motherboard is faulty. If No - then I/O Aux Board may be faulty. Replace speaker. AACE8811

Left and Right Side cabinet lighting not working	LED's to light up cabinet sides receive 12 Volts DC from the power supply through the Power Distribution Board.	Check for proper connection from power supply to Power Distribution Board and then to LED strips. Check continuity. (AACE13037, AACE13016, AACB13004, A5PS1013) Refer to "Power Distribution Power Out Wiring Diagram"
Instruction panel lighting not working	LED's to light up instruction panel receive 12 Volts DC from the power supply through the Power Distribution Board.	Check for proper connection from power supply to Power Distribution Board and then to LED strips. Check continuity. (AACE13018, AACE13008, A5PS1013) Refer to "Power Distribution Power Out Wiring Diagram"

Troubleshooting Guide

Problem	Probable Cause	Remedy
Lights around monitor not working	LED's to light up monitor surround receive 12 Volts DC from the power supply through the Power Distribution Board.	Check for proper connection from power supply to Power Distribution Board and then to LED strips. Check continuity. (AACE13015, AACE13007, A5PS1013) Refer to "Power Distribution Power Out Wiring Diagram"
Small square work light inside cabinet not working	LED to light up inside cabinet receive 12 Volts DC from the power supply through the Power Distribution Board.	Check for proper connection from power supply to Power Distribution Board and then to LED strip. Check continuity. (AACE13035, AACE13038, A5PS1013) Refer to "Power Distribution Power Out Wiring Diagram"
Lights under pressed keys do not light	Faulty Cable	Check for proper connection from Key Controller Board to LED strips Check continuity. (AACB13000, AACE13003, AACE13002, AACE13001, AACE13000, AACE13032, AACE13033) Refer to "Key Sensors and Key Lights Wiring Diagram"
	No USB communication	Ensure the A5CBL5900 is connected to the motherboard USB socket. Red and yellow LED's on Key Controller Board should be on. Check for 12 VDC and 5 VDC on cable # AACE13017 coming into the board.
	Faulty LED	Replace LED strip AACE13032 and/or AACE13023
	Faulty Light Board	Swap connectors on board to check if a different key lights up correctly. If the problem follows the socket on board, replace the Key Controller Board. Part # (AACB13000)
Key lights in marquee do not light up Do pressed key lights work correctly? If no - refer to Lights Under Pressed Keys do not Light section If yes - continue. The problem is in the marquee.	Faulty Cable	Check the red and black cables coming from the outputs on the Key Controller Board. These wires go up to the marquee. Check for proper connection from Key Controller Board to LED strips. Check continuity. (AACE13003 to AACE13012, AACE13002 to AACE13029, AACE13001 to AACE13013, AACE13000 to AACE13028, AACE13031)
	Faulty LED	Replace the LED strip AACE13031in he non-working area.
	Faulty Light Board	Swap connectors on board to check if a different key lights up correctly. If the problem follows the socket on board, replace the Key Controller Board. Part # (AACB13000)
Round Lights around edge of marquee do not light	One light not Working.	Replace the one light. Part # A5LI1302
	Multiple lights not working?	One light will affect the bulbs in series after it. Swap a light into the first position and isolate a faulty light.
	Faulty Cable	Check for proper connection from Key Controller Board to LED lights. Check continuity. (AACB13000, AACE13039, AACE13040, AACE13030, A5LI1302) Refer to "Marquee Lights Wiring Diagram"Ensure the A5CBL5900 is connected to the motherboard USB socket. Red and yellow LED's on Key Controller Board should be on. Check for 12 VDC and 5 VDC on cable # AACE13017 coming into the board.
	No USB communication	
	Faulty Light Board	If the lights have been replaced and they still do not light, replace the Key Controller Board. Part # (AACB13000)

TROUBLE SHOOTING GUIDE

Problem	Probable Cause	Remedy
Marquee Outline LED's and Marquee LED stick do not work.	All three of the LED's not working. One of the three Marquee lights not working.	Refer to "Marquee Lights Wiring Diagram" Check for proper connection from the Power Distribution Board to LED strips. Check continuity. AACE13006, AACE13036, AACE13026 Swap the LED cable to a different socket on the AACE1306 cable to isolate a faulty cable. Replace the faulty LED strip, AACE13034, AACE13020, or AACE13019
Key not registering when played. The sensor is normally blocked - so LED is ON Once key is pressed, Sensor is not blocked, so LED is OFF 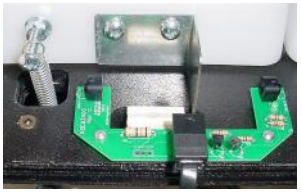	Inspect assembly for physical obstruction. Disconnected, loose or broken wires. Enter Diagnostic Menu to see if game recognizes key. Faulty sensor.	Remove 2 bolts from inside the front door into the bottom of the key drawer. Slide key drawer forward to access sensor. Check connections from opto sensor to Key Controller Board. (Cable # AACB3400A, AACE13021, AACB13000) Key indicator should go to DOWN when button is pushed. Swap sensor to isolate faulty sensor, cable or socket Key Controller Board. Replace sensor if needed. AACB3400A Replace Key Controller Board if needed. AACB13000
Tickets do not dispense or Wrong amount dispensed. Check for the correct amount of tickets showing on Monitor	Tickets on monitor does **not** match tickets coming out of game.	Opto Sensor on ticket dispenser dirty. Faulty ticket dispenser. Notch on tickets cut too shallow. Faulty cable. Disconnected, loose or broken wires. Enter Diagnostic menu and test Dispenser Check dipswitches on I/O Aux Board Faulty I/O Aux Board	Blow dust from sensor and clean with isopropyl alcohol. Replace with working dispenser to isolate the problem. (A5TD1) Flip tickets and load upside-down to have large cut notch toward opto sensor. Check connectors from ticket dispensers to I/O Aux board. Check for continuity on cables AACE13014 There are many options that affect ticket payout using the dipswitches. Refer to Dip Switch Setting page. Replace I/O Aux Board. AACB9604
	Tickets on monitor do match tickets coming out of game.	Settings in Menu are incorrect. Dipswitches on I/O Aux Board not set correctly	Enter Menu and check certain areas: Ticket Pattern Fixed tickets Mercy tickets Verify that Show Game, Amusement Only, and 1/2 ticket payout dipswitches are all OFF

TROUBLE SHOOTING GUIDE

Problem	Probable Cause	Remedy
Low Tickets message on monitor If using card swipe system, turn Dip # 5 ON 	Tickets are empty in ticket tray Faulty cable. Disconnected, loose or broken wires. Faulty low ticket switch. Faulty I/O Aux Board	Load tickets into tray. Ensure tickets hold down micro switch wire. Check connectors from low ticket switch to I/O board. Check for continuity. (AACE13014) Inspect switch and replace if needed. (AASW200) Check dipswitches on I/O Board, Replace I/O Aux Board if needed. AACB9604
Monitor not working. Power down, wait **5 minutes** and power up again.	Monitor shows "No Signal"	The game will not boot up with the monitor disconnected Monitor HDMI cable unplugged from video card. Faulty or loose RAM on motherboard Large power connector unplugged on motherboard Small power connector unplugged on motherboard Faulty power supply - Refer to Power Supply diagnostic section If power supply is working, it may be a faulty motherboard - Replace mother board. (AAMB10E-SHD) 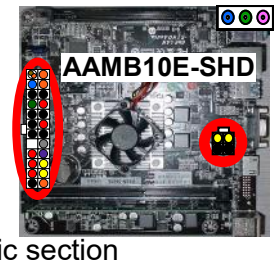
	Monitor has nothing at all on power up.	Power cable unplugged from monitor. Faulty monitor.	Ensure power is plugged into back of monitor, down to power strip. Replace monitor. (AAMO5503-PK)
	Error on screen at power up. Re-Boot game to see if problem still exists.	Display shows "Kernel panic – unable to mount root" Display shows "BioStar BIOS Information" 	Faulty or loose RAM, faulty software, faulty motherboard No SATA drive in motherboard. Check for power connector 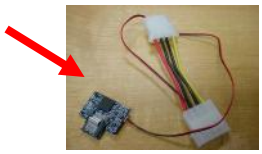
I/O Aux Board Issue Game does not coin up, and has no other functions. 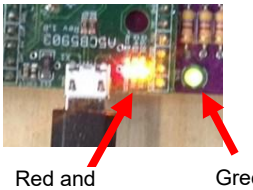	Green power LED should be flashing. Red and Yellow LED's should be flashing. Door Board Version: Not Found Faulty I/O Aux Board. Enter menu and ensure version is shown.	If it is off, then check 12 & 5 Volts DC coming into board on cable AACE13005 from Power Distribution Board. If solid on, it has power, but no communication continue below: If they are off, it is not communicating with the motherboard. Check A5CCBL13000 USB cable. Swap cable with Key Controller Board to identify a faulty cable. If no version shown, replace I/O Aux board Part # AACB9604

POWER SUPPLY DIAGNOSTICS

1.) Verify AC power to game. Check power strip in front door. The rocker switch should be illuminated.

2.) Check connection to power supply.

3.) Ensure Power Supply switch is set to 115V (or 230V)
(*Some model power* supplies may not have this)

4.) Ensure Power switch is on.

5.) Ensure fan is turning.

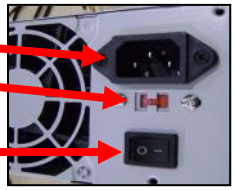

- If power supply fan is turning and there is no 12 Volt out:
Check power supply cables to the Power Distribution Board.
This board takes the power in, and directs it to the different 12 volt loads.

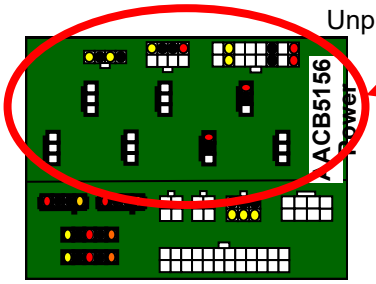

Unplug all power out connectors from the top of the Power Distribution Board.
Turn on game and if it boots correctly, plug one cable in at a time until the issue is found.

Replace power supply if this board is not receiving 12 volts. (A5PS1013)

- If power supply fan is not turning, then continue to “Verify Power to Motherboard”

Verify Power to Motherboard

The motherboard will turn on power supply.
If your game has no 12 volts, it may be the motherboard not turning on.

Also - there may be a 12 volt short somewhere in cabinet that is not allowing the power supply to turn on.
Continue below:

Minimize load on power supply and isolate short

Unplug the power supply cables going to the Power Distribution Board.
This will leave the power supply, motherboard, and monitor left plugged in together.

If power supply, motherboard, and monitor now turn on:
Plug in the Power Distribution Board to power supply, but unplug all of the outputs from the board.
Turn on game and verify the 12 volts is good.
Then plug in one component at a time to power supply to locate short.

If power supply still does not power on, then replace power supply (A5PS1013), or replace motherboard. (AAMB10E-SHD)

BILL ACCEPTOR DIAGNOSTICS

Note: There are many different models and brands of Bill Acceptors that are used on redemption games. Your Bill Acceptor may differ from the unit shown.
Standard DBA is MEI # AE2654-U5 Part # A5AC9101 or A5AC9094

Determine if Bill Acceptor has power:
Turn game ON—The bill acceptor should make noise as stacker cycles and green lights on outside bezel should flash.

If NO power:
Use meter to measure 12 VDC voltage at cable going into Bill Acceptor from front I/O Aux Board

If power is OK:
Clean Bill Acceptor path to make sure there is nothing jamming unit.
Check dipswitch settings on side of acceptor.
Make sure switch # 8 is OFF for Always Enable

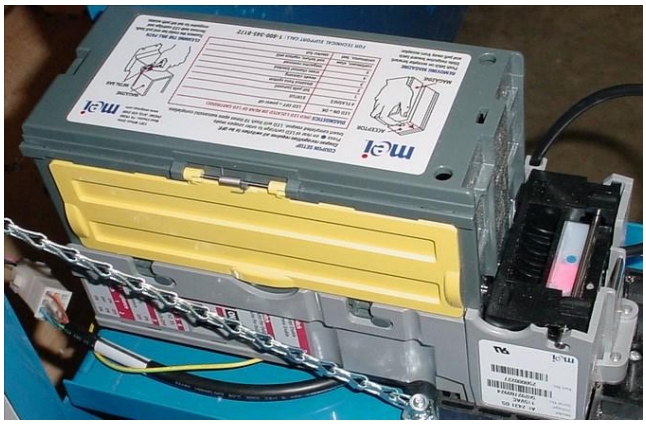

ERROR CODES

Count the number of flashes on front bezel of Bill Acceptor and follow chart for repair.

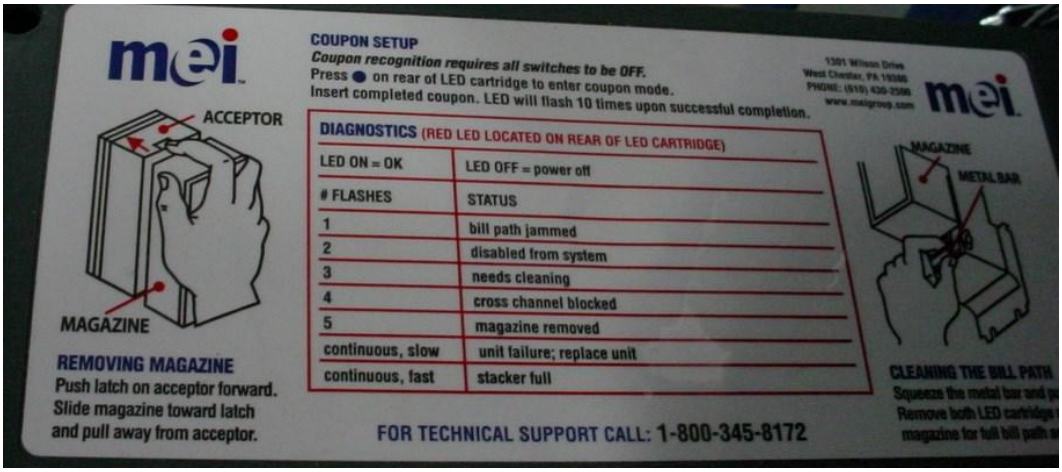

HOW TO ACCESS KEY SENSORS

The piano key drawer is designed to slide out to access the lights and sensors. Trash and debris can also be removed from between the keys.

Tools Needed:
7/16” Wrench

Instructions:

1.) Open the front door using a H95 key.

2.) Reach up inside cabinet and remove the 2 bolts using a 7/16” wrench.

3.) Pull keys out toward front of the cabinet. Do not pull out too far - as the cables will have to be unplugged before key platform is removed from cabinet.

4.) The drawer can be rested on the open front door, or unplug cables and remove from the cabinet.

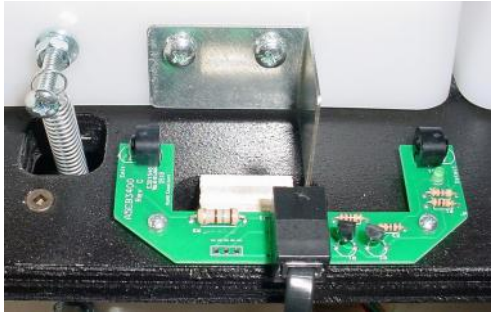

The sensors can now be cleaned or replaced.
Part # AACB3400A

To access underneath the keys, carefully slide this rod partially out.
Part # A5RO5300

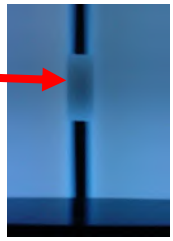

The key can now be removed, be careful not to loose the 3 washer spacers (part # A5WANY051) in between the keys. (part # A5VF5300)

Re-assembly the key drawer in the reverse order using the same hardware:

A5BOHH060
1/4-20 x 1 1/2”

A5WASI020
1/4” Lock Washer

A5WAFL060
1/4” Flat Washer

HOW TO CHANGE AAMO5506-PK MONITOR

As monitors become obsolete and unavailable, replacement monitors will require a different mounting process or wood pieces to enable the new monitor to fit and function. As such, your new monitor has been delivered with the hardware necessary to adapt the monitor for use with your game.
These instructions will show how to prepare the new monitor for your cabinet.

Tools Needed:
5/32” Allen Wrench
7/16″ socket
Phillips Screwdriver

Hardware Included:
Plywood Mounting board
4x Black 20mm Pan Head Screws
8x Flat 1/4” Washers

Instructions:
Preparing the new monitor
-Locate the plywood mounting board.

-With the countersunk holes facing upward, line up the holes in the board with the mounting inserts on the back of the monitor.

-Locate the 4 Black panhead screws.

-Place 2 flat washers onto each screw and insert them into the countersunk holes of the mounting board.

-Use a 5/32” Allen Wrench to tighten the four screws as much as possible and secure the mounting board to the tv.

HOW TO CHANGE AAMO5506-PK MONITOR

Instructions:

Unplug the game's power cord from the wall.
Unlock and remove the back door of the game.

Remove the 10 black screws (5 on each side) using a # 2 Square bit screwdriver.
Remove the plastic surround bezel and set aside for later.

Unplug monitor power from power strip and the HDMI 1 cable from the back of the old monitor.
Remove and cable clamps to ensure the cables will come out with the monitor as it is removed from the cabinet.

Remove 2 black bugle screws from the lower back of monitor frame using a # 2 Square bit screwdriver.

The monitor wood frame will be attached to the monitor and the wood will come out with the monitor as it is removed from cabinet.

The old monitor can now be removed from the cabinet.
Lift up to disengage the locking tab.

- Remove the wood from the old monitor and discard.
The new monitor will include new wood.
Unbox the new monitor and carefully lay flat on a soft surface.

- Place the new wood frame onto the back of the new monitor as shown.
Secure the monitor mount to the back of the monitor using the included bolts/washers using a Philliips screwdriver.

The monitor and wood can now be installed in the game.

HOW TO CHANGE AAMO5506-PK MONITOR

Ensure the locking wood tab is fully engaged over the wood as shown.

Re-install the 2 black bugle screws from the lower back of monitor frame.

Re-install the white plastic surround.

Plug the monitor power back into the power strip and the HDMI cable into HDMI 1 on the back of the new monitor.

The installation of the new monitor is now complete. Please turn on your game and ensure that everything operates and displays as it should.

DOOR BOARD PINOUT

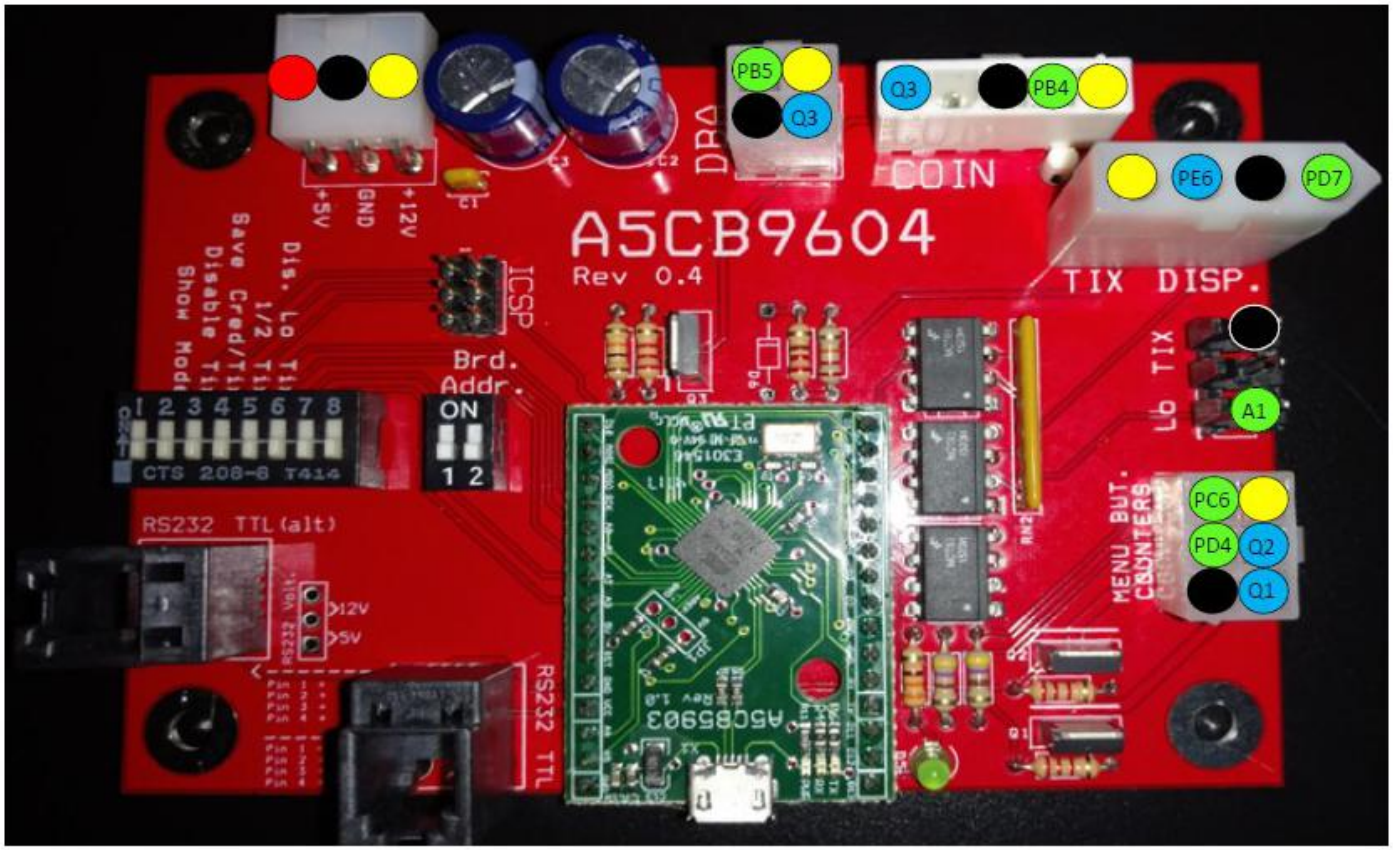

= +12V

= +5V

= Ground

= Output

= Input

Outputs:

Q1 (PD1)	Game Counter
Q2 (PD0)	Tickets Counter
Q3 (PD6)	Coin Lockout
PE6	Ticket Enable

Inputs:

PD4	Menu Button
PC6	Select Button
PD7	Ticket Notch
PB4	Coin In
PB5	DBA In
D15 (A1)	Low Ticket Switch Input

AVAILABLE BLANKING PLATES

A5PL4200 DBA Plate for 12V Upstacker Bill Acceptor

A5PL9998 Plate used instead of Coin Mechanisms

A5PL8900 Plate used for Bill Validator

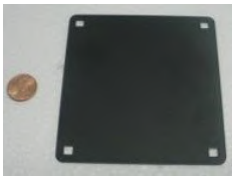

A5PL9995 Plate used instead of ticket dispenser

MONITOR SETTINGS

There have been 2 different versions of 55 inch TV's used in Piano Keys. Use the remote control to turn the TV on/off and to access the TV menu to adjust settings.

The following screen shots are the recommend settings for the original A5MO5502 TV:

During February of 2019, the TV changed to a LG LGE-55UK6090

The following screen shots are the recommend settings for this TV part # AAMO5503-PK:

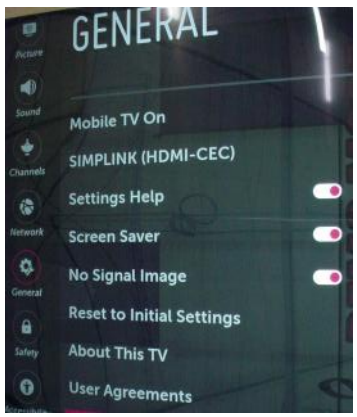

PARTS LIST

PART #	DESCRIPTION	PART #	DESCRIPTION
9654K191	Spring	AACE13007	Cable Assy, Monitor Light Power
A5BK1013	Bracket, Pushbutton/Counters	AACE13008	Cable Assy, Game Play Light Power
A5BK9999	Bracket, Power Supply Mounting	AACE13010	Cable Assy, Speaker Wires
A5CA7000	Carpet, Black	AACE13011	Cable Assy, Menu/Select
A5CB1499	Coin Box, White	AACE13012	Cable Assy, #1 & #8 Marquee Light
A5CO4203	Cover, Speaker	AACE13013	Cable Assy, #3 & #6 Marquee Light
A5DE0042	Decal, Menu/Vol	AACE13014	Cable Assy, Ticket Tray/Coin Door/Dba
A5DE13000	Decal, Monitor Cover	AACE13015	Cable Assy, Monitor Light
A5DE13001	Decal, Front Cabinet Outside	AACE13016	Cable Assy, Outside Piano Light
A5DE13002	Decal, Front Door Inside	AACE13017	Cable Assy, Key Control Board Power
A5DE13003	Decal, Instructions	AACE13018	Cable Assy, Game Directions Light
A5DE13004	Decal, Marquee Arch	AACE13019	Cable Assy, Top Marquee Glow Light
A5DE13005	Decal, Marquee Logo	AACE13020	Cable Assy, Piano Keys Marq Outline
A5DE13006	Decal, Marquee Light Strip	AACE13021	Cable Assy, Piano Key Sensors
A5DE13007	Decal, Piano Inset	AACE13022	Cable Assy, Audio Board Power
A5DE13008	Decal, Side Left	AACE13023	Cable Assy, Line Filter
A5DE13009	Decal, Side Right	AACE13024	Cable Assy, PS To Main Bd Ground
A5DE13010	Decal, Monitor Surround Strip	AACE13025	Cable Assy, Ticket Disp To Hinge Ground
A5DE13011	Decal, Marquee Flourish	AACE13026	Cable Assy, Marquee Light Splitter
A5FI9010	Filter, F1700ca06, Inline	AACE13027	Cable Assy, Door Hinge To Ground Stud
A5HO1003	Holder, For Light Bars	AACE13028	Cable Assy,#4 & #5 Marq Light Power
A5LI1302	LIGHT,"EGG",26mm 3pcs SM 5050	AACE13029	Cable Assy,#2 & #7 Marq Light Power
A5LK2001	Lock, Cash Box, A05/E00 Key Code	AACE13030	Cable Assy, Marquee Addressable Power
A5LK5002	Lock, 7/8", H95 Key Code	AACE13032	Cable Assy, Piano Lights
A5ME2035	Ticket Tray, Metal	AACE13033	Cable Assy, Piano Lights
A5ME4182	Metal, Cashbox Guide	AACE13034	Cable Assy, Marquee Stick Light
A5ME5300	Metal, Keyboard Front	AACE13035	Cable Assy, Servicing Square Light
A5ME5301	Metal, Keyboard Flag	AACE13036	Cable Assy, Marquee Splitter Light Pwr
A5PL4200	Plate, Up Stacker	AACE13037	Cable Assy, Inside Piano Side Light
A5PL8900	Plate, Blanking, Bill Validator	AACE13038	Cable Assy, Power To Cabinet Light
A5PS1013	Power Supply, EVGA 500	AACE13039	Cable Assy, Egg Light Power From Brd
A5RO5300	Rod,3/4"Od,.62"Id.065" Wall	AACE13040	Cable Assy, Egg Light Power
A5RVNY010	Rivet, Nylon, .148" Hole Dia	AACE1710	Cable, Door Ground
A5TD1	Ticket Dispenser, Entropy	AACE1715	Cable Assy, Ground Strap
A5VF5300	Vacuum Form, Keys, Piano Keys	AACE8811	Speaker, 4 Ohm, 25watt, Boss
A5VF8000	Vac Form, Monitor Cover	AACO1020	Counter Assy, No Feet
A5CBL5900	Cable, USB, Male A To Male Micro	AAPB2700	Push Button Assembly
A5CE2300	Audio Filter Cable	AASW200	Low Ticket Switch
A5CEAU010	Audio Cable	W5HG1025	Hinge,16",Double Bend
A5CORD35A	Cord,15',Hdmi W/Ferrite Cores	W5HG1065	Hinge,5-75,Single Bend
A5CORD5	Cord, AC Computer Cord, 6.5'	W5KE5000	Keeper, Lock
A5OU1000	Outlet,Strip,Six,15amp,125v	W5TM4000	T-Mold,7/8""Black
AACBL4A-DOOR	Coin Mech Door Cable	W5TM4001	T-Molding,7/8"White
AACE13000	Cable Assy, Piano Key #1 Light Power	A5CB9600	PCB, Audio Amplifier
AACE13001	Cable Assy, Piano Key #2 Light Power	AAMO5503-PTL	Monitor, 55" TV
AACE13002	Cable Assy, Piano Key #3 Light Power	AACB13000	PCB, Key Controller
AACE13003	Cable Assy, Piano Key #4 Light Power	AACB3400A	Assy, Sensor
AACE13004	Cable Assy, Piano Side Light Power	AACB5156	PCB, Power Dist.
AACE13005	Cable Assy, Power Dist to Door Board	AACB9604	Board, Door Interface
AACE13006	Cable Assy, Marquee Light Split Power	AAMB10E-SHD	Mother Board,Qc5000-Itx/Ph W/Hard Drive

DECAL DIAGRAM

Not Pictured

13008 Side Piano Left

PARTS PICTURES

9654K191

A5BK1013

A5BK9999

A5CA7000

A5CB1499

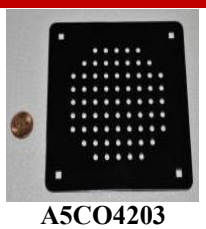
A5CO4203

A5DE0042

A5FI9010

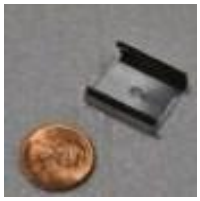
A5HO1003

A5LI1302

A5LK2001

A5LK5002

A5ME2035

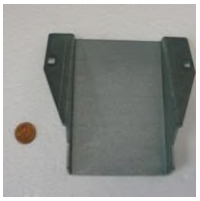
A5ME4182

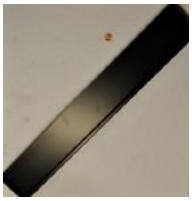
A5ME5300

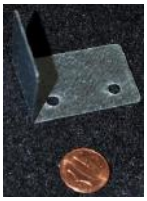
A5ME5301

A5PL4200

A5PL8900

A5PS1013

A5RO5300

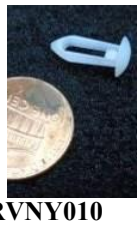
A5RVNY010

A5TD1

A5VF5300

A5CBL5900

A5CE2300

A5CEAU010

A5CORD35A

A5CORD5

A5OU1000

AACBL4A-DOOR

AACE1710

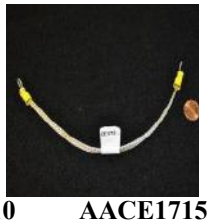
AACE1715

AACE8811

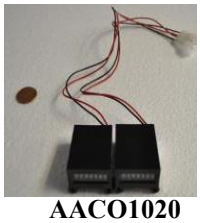
AACO1020

AAPB2700

AASW200

W5HG1025 W5HG1065

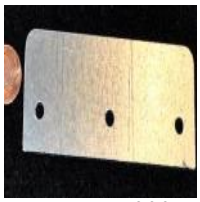
W5KE5000

W5TM4000

W5TM4001

A5CB9600

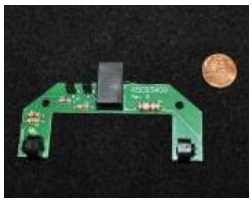
AACB3400A

AACB5156

AAMB10E-SHD

REPAIR/MAINTENANCE LOG

If you need to make repairs or order replacement parts it is a good idea to keep a log.
Below is a chart you can use to track repairs and maintenance.

DATE	MAINTENANCE PERFORMED	PARTS ORDERED	MISC.

NOTES

TECHNICAL SUPPORT

Excellent customer service is very important to Bay Tek Entertainment! We know that keeping your games in great operating condition is important to your business. When you need us, we are here to help. You can call us for free technical assistance, and you can count on us to have parts on-hand to support your game. When you do need us, it's important that you know what to expect.
We offer options that fit your needs.

Electronics / Circuit Boards:

· **Spare Parts** – Take matters into your own hands and purchase new spare Circuit Boards for your Bay Tek games. Many of our games share the same main-board electronics. This means you can buy one set of spare electronics to support many of your Bay Tek games. Spare boards allow you to get your game up and running the quickest and provide you a valuable troubleshooting option. Call our technicians to get recommendations for what you should keep on hand for spare parts!

Technical Support:

"You" are the best tool for troubleshooting! Your abilities to understand the game and your skills to repair the game are invaluable to us! If you need help, you know you can call us. It's not easy to diagnose a game remotely by phone, but our technicians do a great job. They'll need your help to perform some
troubleshooting steps and convey to them exactly what's happening with your game.

Returns & Credits:

Sometimes the issue isn't what it seemed to be. If you need to return a circuit board, just give us a call to get Return Authorization. You will be credited for the cost of the board and charged only the bench fee for our processing and retesting that board.

Note: Bench fees apply regardless of whether the repair was your choice or a recommendation from a Bay Tek Entertainment technician.

It's a small price to pay for troubleshooting the issues with your game.

You can count on our Technical Support Team for service and support!

WARRANTY OPTIONS

Bay Tek Entertainment warrants to the original purchaser that the game will be free of defects in workmanship and materials for a period of 12 months from the date of shipping
Bay Tek Entertainment will, without charge, repair or replace at it's option defective product or component parts upon notification to the parts/service department.
New, purchased parts have a 30 day warranty.
Any labor expended is not included in this warranty.
Warranty replacement part(s) will be shipped immediately via ground service, along with a Return Material Authorization (RMA) number for the return of defective part(s). Defective part(s) must be shipped back to Bay Tek Entertainment unless otherwise instructed.

This warranty does not apply in the event of any misuse or abuse to the product, or as a result of any unauthorized repairs or alterations. The warranty does not apply if the serial number decal is altered, defaced, or removed from it's original position.

Should you need your game serviced, determine the serial number from the decal on the back of the game cabinet or main board, and call **920.822.3951 Ext. 1102**
or e-mail to: **baytek.service@thevillage.bz**