FINESSE

TRANSFORMING THE ORDINARY

SINCE 1800

TILLYS

MAKING ROLLER BLINDS

Beautiful.

With beautifully contemporary solid brass brackets, Finesse roller blinds function exactly the same way as a standard system but produce an aesthetic appeal to the product as never before.

Suitable for wall and ceiling fix, the brackets are available in all Tillys Classic metal finishes.

Finesse hardware is compatible with most motorised systems as well as chain and spring operation.

CRAFTED WITH UNDERSTANDING

TRULY CONFIGURABLE

COMBINED WITH TECHNOLOGY

WITH OUR RANGE OF FINISHES

COLOUR COORDINATED CHAINS

A COMPLIMENT TO ROMAN BLINDS

AVAILABLE WITH
DUAL BRACKETS

Spring Operation

For a minimal effect, this option has no visible chains or pulleys - it works on a spring loaded barrel. The only visible control is the option to have a pull cord attached to the hembar to pull the blind into position, although this is just an option. Pull down to set to desired height and simply tug to release the blind back to the open position.

Chain Operation

The most common operation for these types of blind. Aura have created a beautiful bracket system that hides away very neatly the chain mechanism at the end of the roller barrel. The chain shroud hides this and together with the chain retainer, creates a perfect solution that enhances any interior.

Bottom-Up Operation

This operation works in the same way as the spring loaded operation shown above, but it stacks at the cill level. If used with cords, these are attached to the hembar but run to the top of the window. The other option is to operate the blind cordless, and use catches at various locations at the side of the window reveal.

Motorised Operation

The Finesse roller blinds are available in a motorised operation. For the ultimate in sophisticated luxury these ultra quiet motors are hard wired and can be operated either via a wall switch or with a radio controlled remote handset.

Battery Operation

As above, these blinds can be operated by battery as well - high quality rechargeable batteries are concealed within the roller barrel and are completely invisible. This system is operated via a radio controlled remote handset.

AV Interface - both the motorised and battery operated systems can be easily interfaced with almost any AV home automation system. Please enquire for further details on this.

Fabrics

OUR FABRICS

Sheer Linens

Available in a range of colours

Privacy Cottons

Available in a range of colours

Blackout Fabric

Available in a range of colours

Screen Fabric

Available in a range of colours

These products are also available in customers own material - virtually any fabric can be used, subject to testing. Customers own material can either be processed, laminated standard or laminated blackout.

HARDWARE OPTIONS

FINESSE BRASS

Attractive solid brass brackets available in all Tillys classic metal finishes
Chain, spring and motorised systems
Bottom-up systems
Suitable for wall and ceiling fix

Dimensions:
51mm x 48mm
70mm projection

FINESSE ALUMINIUM

Attractive solid aluminium brackets
Available in polished aluminium or champagne. Also available in any powder coated finish by special order
Chain, spring and motorised systems
Bottom-up systems
Suitable for wall and ceiling fix

Dimensions:
55mm x 27mm
68mm projection

Concealed fixings

Child safety chain retainer in matching finishes

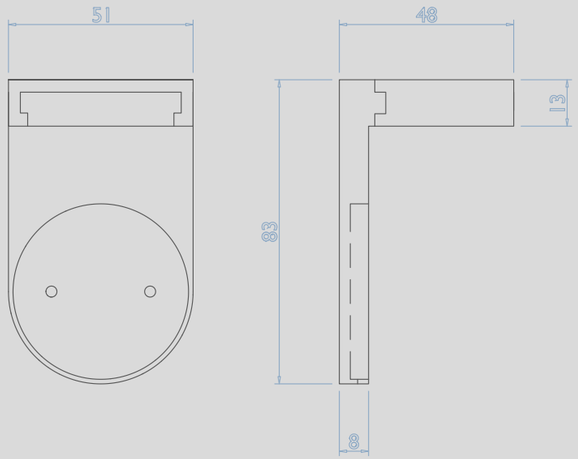

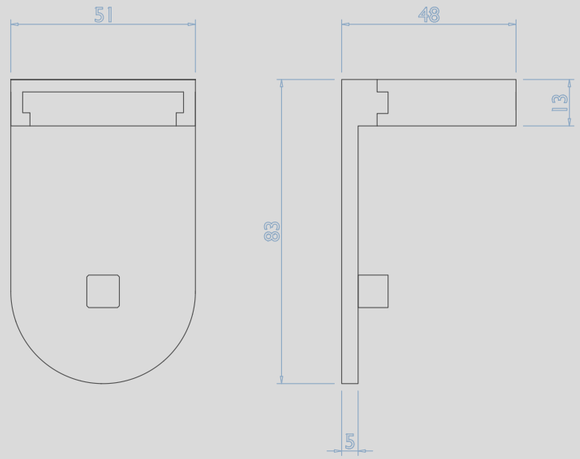

SINCE 1800

CONTACT

023 9225 2525

www.tillysinteriors.com

TILLYS INTERIORS LTD
Unit 1, Aysgarth Road, Waterlooville, PO7 7UG