420400,420409

4″ OVAL BAR

Components:

- Driver Side Step Bar Qty 1
- Passenger Side Step Bar Qty 1
- Front Bracket Qty 2
- Rear Bracket Qty 2
- Front Support Braces Qty 2
- Rear Support Braces Qty 2
- M10 Bolt Plate Qty 4
- Rubber Gasket Qty 4
- Plastic Push Nut Qty 4

Hardware:

- Cab Mount Bolt Qty 4
- M10 x 30 mm Button Head Bolts Qty 8
- M12 Rubber Washer Qty 4
- M10 x 30mm Hex Head Bolt Qty 4
- M10 Flat Washers Qty 20
- M10 Lock Washers Qty 16
- M10 Hex Head Nuts Qty 8

1. Remove all contents from the package and check stainless steel tubes for any damage. Also, verify that all components and hardware listed above are included before you begin installation.

2. Read installation manual and installation drawing completely. Understand all brackets and bolts before installation.

3. Begin installation on the driver's side. Remove the body mount bolts from the front and rear body mounts underneath cab of truck and discard. (Keep the bushings). Align Front and Rear Bracket as shown.

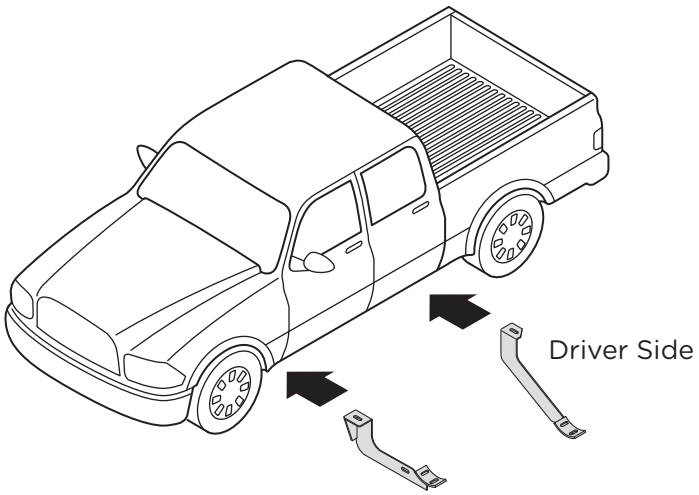

4. Install Front Mount Bracket by using one (1) Cab Mount Bolt.

Note: Make sure factory bushing is put on the same way is taken off.

5. Install Rear Mount Bracket by using one (1) Cab Mount Bolt.

6. Insert one (1) M10 Bolt Plate into the hole on the Rocker Panel. Make sure the Plastic Push nut is on the stud of the Bolt Plate to hold it into place. Repeat this for the front and rear.

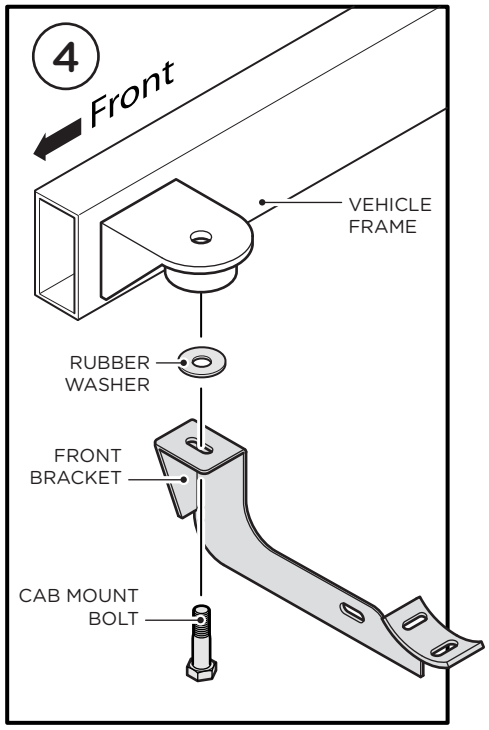

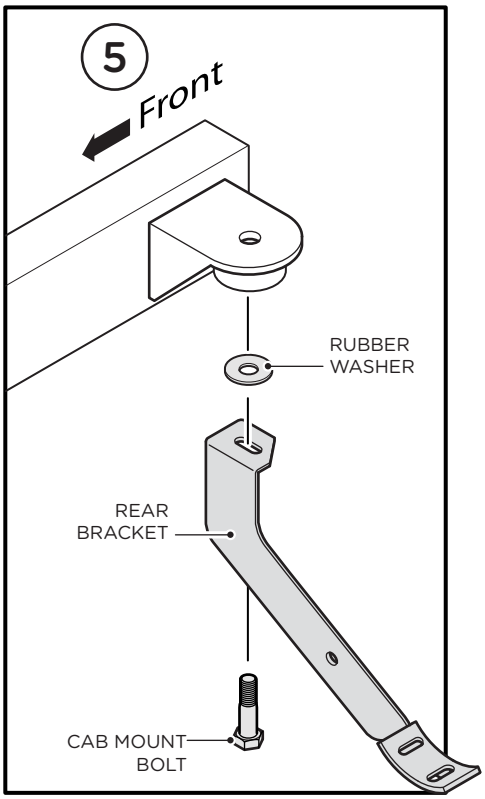

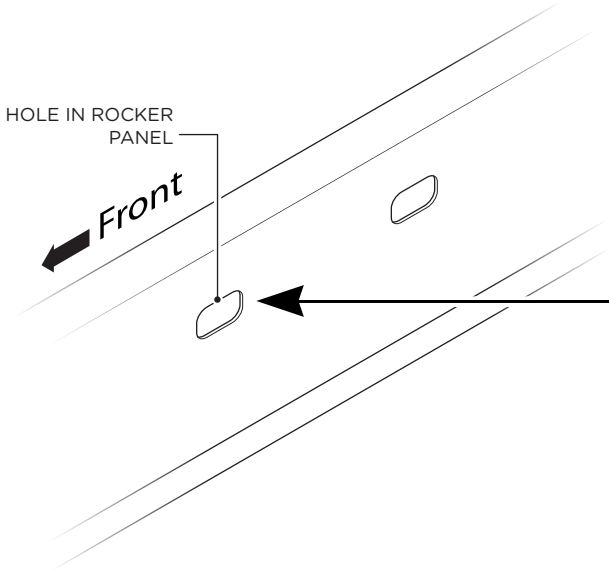

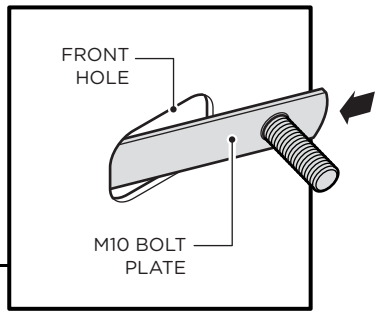

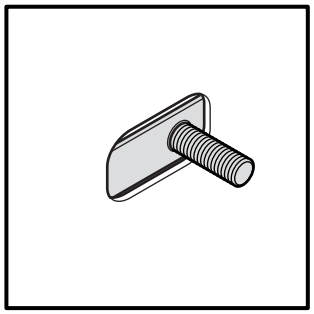

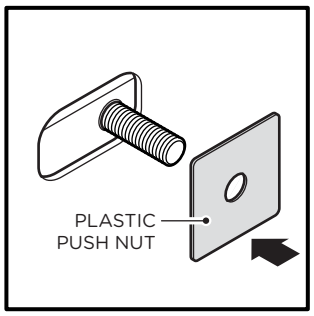

7. Fasten the Front Support Brace to the M10 Bolt Plate as shown. Secure using one (1) M10 Lock Washer, one (1) M10 Flat Washer and one (1) M10 Hex Head Nut (7a). Repeat this procedure for the Rear Support Brace (7b).

Note: For 2009 & Up New Body Style Dodge Ram 1500, see page 4.

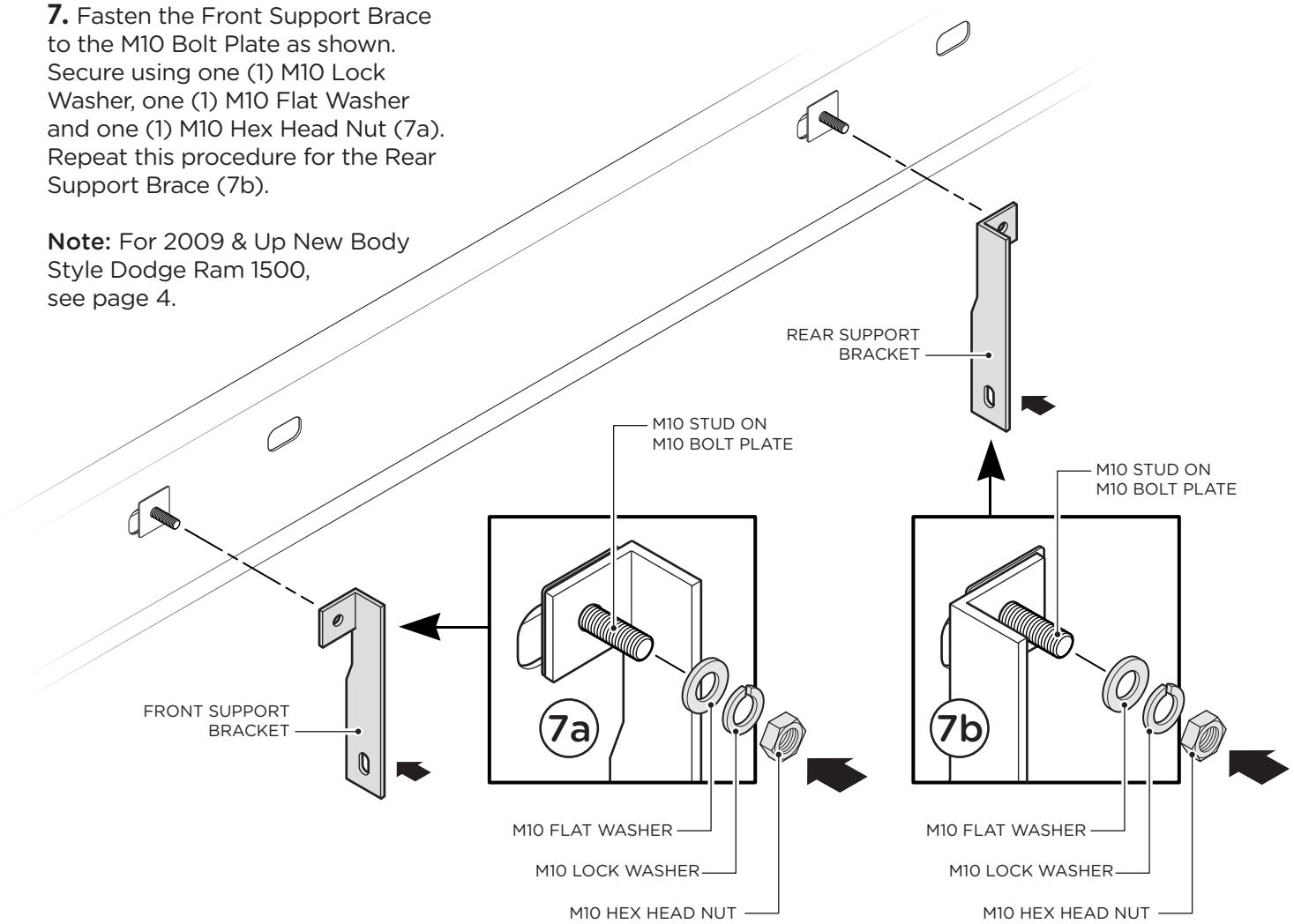

8. Attach the Front Support Brace to the Front Bracket using one (1) M10 Lock Washer, two (2) M10 Flat Washers, one (1) M10 Hex Head Nut, and one (1) M10 X 30MM Hex Head Bolt (8a). Repeat this procedure for attaching the Rear Support Brace to the Rear Bracket (8b).

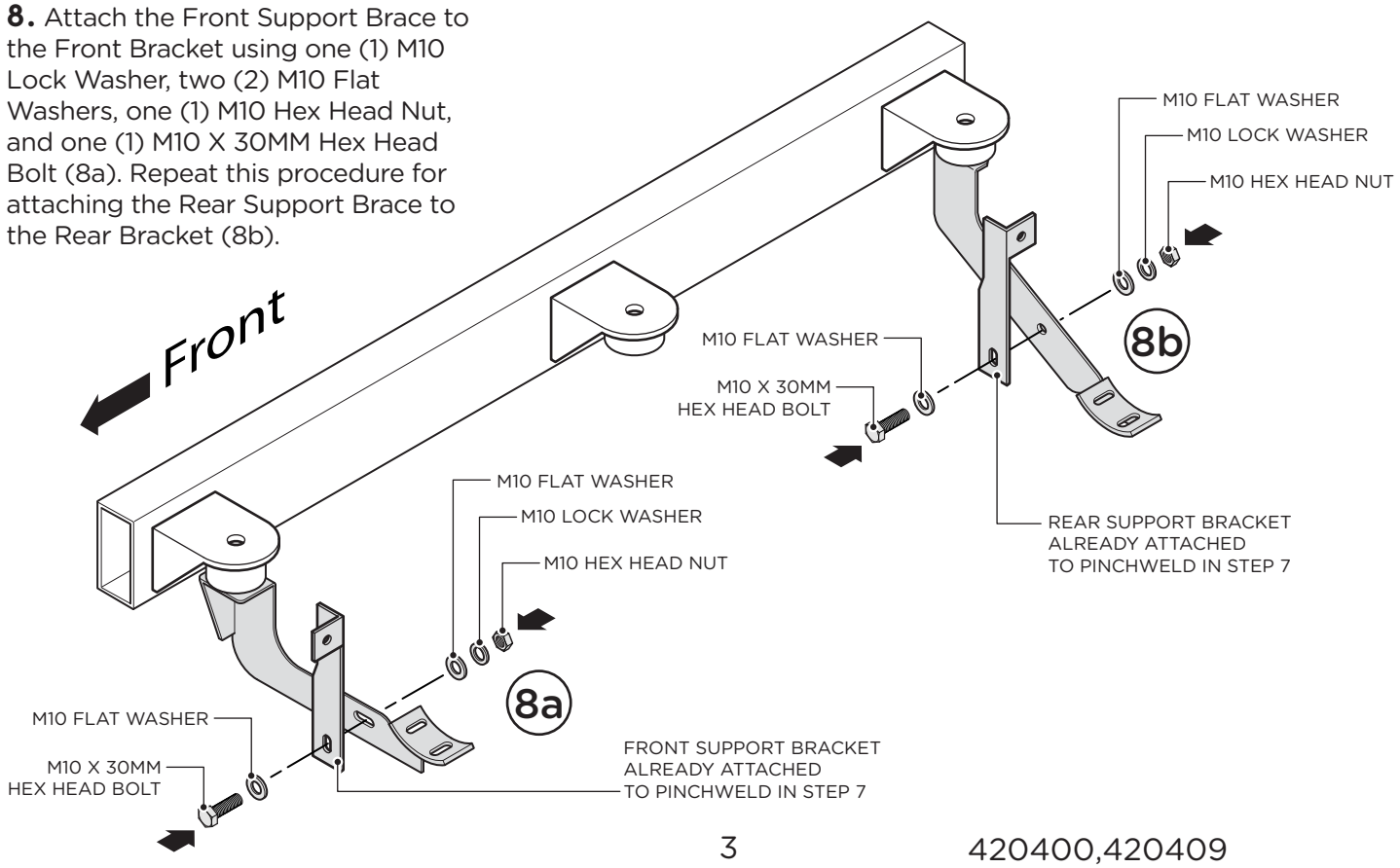

9. Place the Rubber Gaskets onto the Bracket Cradles. Then, place the Step Bar onto the Brackets.

10. Secure Step Bar to each Bracket using two (2) M10 Xx 30MM Button Head Bolts and two (2) M10 Lock Washers and two (2) M10 Flat Washers per bracket.

Tighten until the split lock washer is flat against bracket and snug. DO NOT over tighten and strip the threaded insert in the tube.
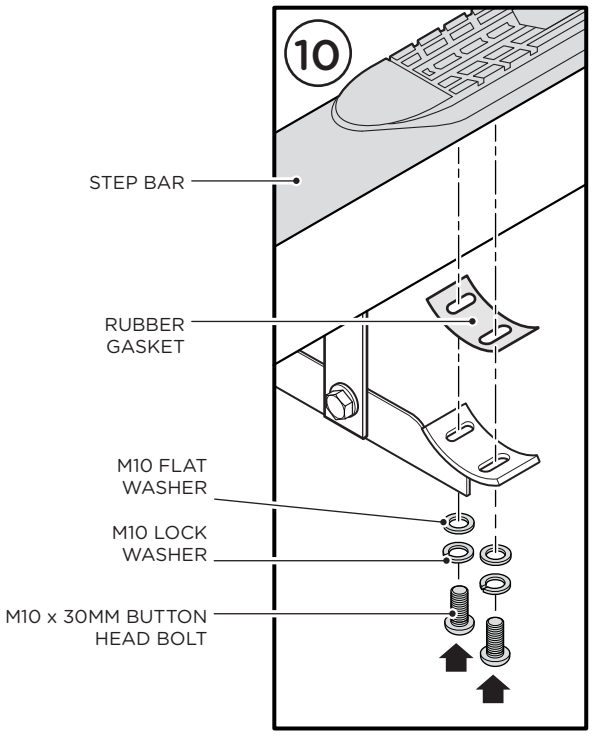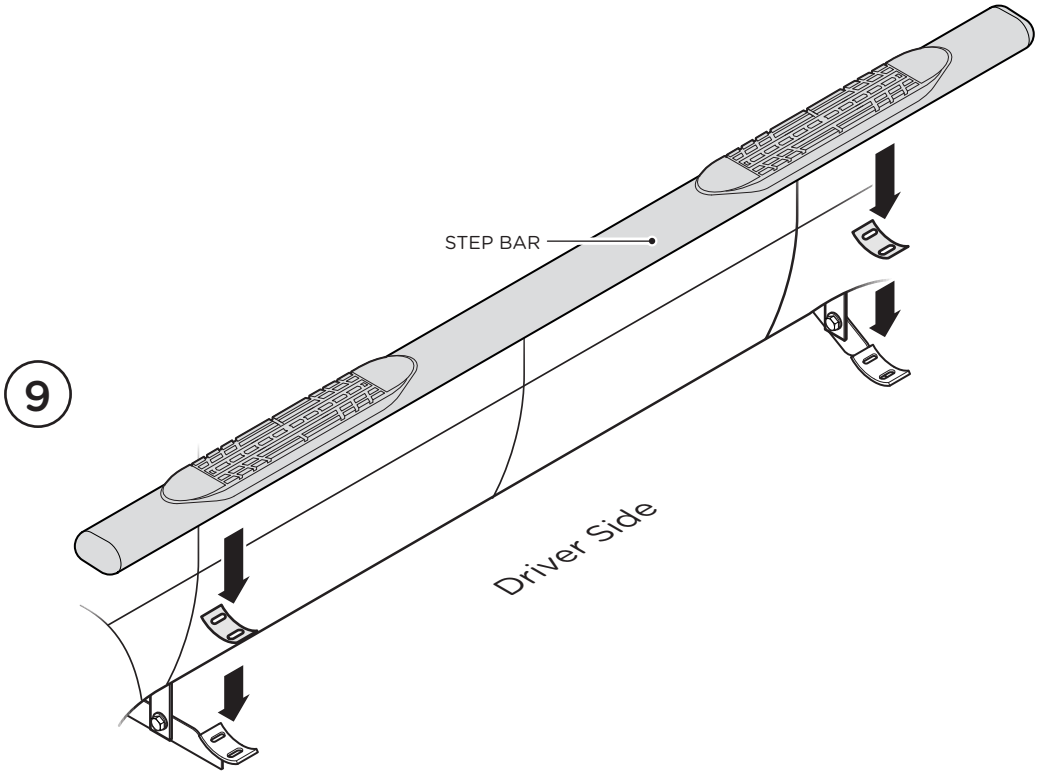
Repeat these steps for passenger side installation. When all hardware is in place, everything must be tightened. See Page 1 for Torque Specifications.