DUOTONE

MONO 2024

User Manual

TIPS & TRICKS

WATCH OUT FOR USEFUL TIPS & TRICKS REGARDING OUR PRODUCTS UNDER WWW.DUOTONESPORTS.COM.

CONTENT

1.	**RELEASE OF LIABILITY**	**4**
2.	**SAFETY AND PRECAUTIONS**	**6**
2.1.	Kiteboarding Safety	6
2.2.	Dangers from the Kite	7
2.3.	Dangers from Kite Lines	7
2.4.	Dangers from the Kiteboard	8
2.5.	Dangers to uninvolved third parties	8
2.6.	Weather related Dangers	8
3.	**RIGGING THE KITE**	**10**
3.1.	Overview of the Kite	10
3.2.	Mono Line setup	11
3.3.	Adaptive Tip / sheeting force	11
3.4.	Inflating the Kite	12
3.5.	Securing the Kite on the Beach	13
4.	**HOW TO USE THE AIR PORT VALVE II**	**14**
5.	**ATTACHING THE LINES**	**15**
5.1.	Kook-Proof-System	15
6.	**PACKING UP THE KITE**	**16**
7.	**KITE CARE**	**17**
8.	**HANDLING OF THE LAZY PUMP CLIP**	**18**
8.1.	Removal of the Lazy Pump Clip	18
8.2.	Attaching the Lazy Pump Clip	19
9.	**BLADDER REPAIR**	**20**
9.1.	Removing the Leading Edge Bladder	20
9.2.	Removing the strut Bladders	21
9.3.	Bladder Repair	24
9.4.	Re-inserting Leading Edge Bladder	25
10.	**WINDSPEED AND KITE SIZE**	**27**
11.	**WARRANTY POLICY**	**28**

ENGLISH

1. RELEASE OF LIABILITY

RELEASE OF LIABILITY, CLAIM WAIVER, ASSUMPTION OF RISK

By assembling and/or using this DUOTONE product, you agree that you have read and understood the entire DUOTONE product owner's manual, including all instructions and warnings contained in that manual, prior to using the DUOTONE product in any way. You additionally agree that you will ensure any additional or subsequent user of your DUOTONE product will read and understand the entire DUOTONE product Owner's Manual, including all instructions and warnings contained in that manual, prior to allowing that person to use your DUOTONE product.

ASSUMPTION OF RISK

Use of the DUOTONE product and any of its components involve certain inherent risks, dangers, and hazards that can result in serious personal injury and death to both the user and to nonuser third parties. In using the DUOTONE product, you freely agree to assume and accept any and all known and unknown risks of injury to you and to third parties while using this equipment. The risks inherent in this sport can be greatly reduced by abiding by the warning guidelines listed in this owner manual and by using common sense.

RELEASE AND WAIVER OF CLAIMS

IN CONSIDERATION OF THE SALE OF THE DUOTONE PRODUCT TO YOU, YOU HEREBY AGREE TO THE FULLEST EXTENT PERMITTED BY LAW, AS FOLLOWS:

To waive any and all claims, that you have or may in the future have against Boards & More GmbH and all related parties resulting from use of the DUOTONE Product and any of its components.

To release Boards & More GmbH and all related parties from any and all liability for any loss, damage, injury or expense that you or any users of your DUOTONE product may suffer, or that your next of kin may suffer, as a result of the use of the DUOTONE product, due to any cause whatsoever, including negligence or breach of contract on the part of Boards & More GmbH and all related parties in the design or manufacture of the DUOTONE product and any of its components. In the event of your death or incapacity, all provisions contained herein shall be effective and binding upon your heirs, next of kin, executors,administrators, assigns, and representatives. Boards & More GmbH-related parties have not made and expressly deny any oral or written representations other than what is set forth herein and the DUOTONE product User's Manual.

2. SAFETY AND PRECAUTIONS

DUOTONE STRONGLY RECOMMENDS::

If you are not yet able to kite or if you feel insecure, you must attend a licensed Kiteboarding school to learn the basics of this fantastic sport. Get familiar with the safety precautions, which are indispensable for safe Kiteboarding.

Kiteboarding creates a heavy strain on your body. You should only go Kiteboarding if you are in good physical condition and suffer from no medical conditions that may prevent you from kiting. Always act carefully to not endanger yourself or anyone else.
Do not endanger the safety of uninvolved third parties! Be aware of the risks you take and limit them to a minimum level!

Before going on the water make sure you are familiar with your DUOTONE equipment. For your own safety, read the following instructions as well as product descriptions very carefully.

2.1. KITEBOARDING SAFETY

- Fly your Kite only over unobstructed water. Never on land!
- Fly this kite only if you are a strong swimmer and are wearing a Coast Guard approved PFD.
- Only use bars with a safety system that you can open in emergency situations.
- Use a quick-release kite leash so that you can unhook your body from the gear in case of an unforeseeable emergency.
- Avoid power lines, telephone poles, airports, streets, buildings and trees.
- If you use a board that is leashed to your body, wear a helmet!
- Take into account the usual risks associated with water sports such as rocks, waves, sunburn, hypothermia, jellyfish etc.

2.2. DANGERS FROM THE KITE

WHEN KITEBOARDING YOU MIGHT FACE THE EXTREME FORCES OF THE ELEMENTS.

In rare cases the kite or its lines can cause dangerous situations:

- You can hurt yourself through uncontrolled water take-offs caused by gusty conditions, and the danger of collision with obstacles.
- The incorrect usage of lines creates a high risk of injury for yourself as well as others.
- People who get caught by the lines can suffer injuries or burns.
- Uninvolved third parties can get injured through crashing kites.
- Fly your kite only over unobstructed water.
- When kiting, do not fly over people or pets.
- Ensure that a semi-circle extending 100 metre downwind and to each side of your flying position is clear of people and obstructions.
- Use a kite leash that allows you to keep the kite under control.
- When not in use, inflated kites must be secured with sand or heavy objects.
  A kite filled with air can fly away at any time, injuring people and in extreme cases even kill them.

2.3. DANGERS FROM KITE LINES

- Never touch the kite lines when the kite is under wind load as these lines are dangerously sharp while under tension.
- Never use kite lines damaged with knots, nicks, cuts etc. They must be changed!
- Use only lines that have no knots in them, as knots can weaken lines by as much as 50 %.
- Do not touch the lines of the kite, unless the kite has been secured to the ground.
  An unsecured kite can re-launch unexpectedly, putting the line dangerously under tension.
- Never tie lines around your arms or other body parts!

2.4. DANGERS FROM THE KITEBOARD

- A collision with the Kiteboard might cause serious head injuries.
- Injuries to the legs and feet are also possible.

2.5. DANGERS TO UNINVOLVED THIRD PARTIES

- It is within your responsibility to check whether uninvolved people or other athletes may be endangered or injured by your actions or your gear.
- Do not kite at places where uninvolved third parties might get injured.
- Avoid flying the kite in the vicinity of other water users such as swimmers, kayakers, windsurfers, water-skiers and boaters.

2.6. WEATHER RELATED DANGERS

- Avoid offshore wind.
- Be careful with onshore wind.
- Get information on tidal and sea current conditions at your kiting spot!
- Get information from both the weather report and the locals on prevailing weather conditions.
- Never use the kite with wind forces so strong that you are unable to maintain precise control.
- Do not use the kite when wind conditions are likely to change dramatically.
- Never use this kite when thunderstorms are nearby or when such storms have a good chance of developing (check the weather report!).
- Leave the water immediately when a storm is approaching.
  You are in a life threatening situation since you may be struck by lightning!

BFT	M/S	KM/H	MPH	KNOTS	DESIGNATION
0	0 – 0,2	0 – 0,8	0 – 0,6	0 – 0,5	Calm
1	0,3 – 1,5	0,9 – 5,5	0,7 – 3,5	0,6 – 3,0	Light Air
2	1,6 – 3,3	5,6 – 12,1	3,6 – 7,5	3,1 – 6,5	Light Breeze
3	3,4 – 5,4	12,2 – 19,6	7,6 – 12,2	6,6 – 10,5	Gentle Breeze
4	5,5 – 7,9	19,7 – 28,5	12,3 – 17,8	10,6 – 15,5	Moderate Breeze
5	8,0 – 10,7	28,6 – 38,8	17,9 – 24,0	15,6 – 20,9	Fresh Breeze
6	10,8 – 13,8	38,9 – 49,8	24,1 – 31,0	21,0 – 26,9	Strong Breeze
7	13,9 – 17,1	49,9 – 61,7	31,1 – 38,3	27,0 – 33,3	Near Gale
8	17,2 – 20,7	61,8 – 74,6	38,4 – 46,4	33,4 – 40,3	Gale
9	20,8 – 24,4	74,7 – 88,0	46,5 – 54,7	40,4 – 47,5	Strong Gale
10	24,5 – 28,4	88,1 – 102,0	54,8 – 63,6	47,6 – 55,3	Storm
11	28,5 – 32,6	102,1 – 117,0	63,7 – 73,0	55,4 – 63,4	Violent Storm
12	32,7 +	117,1 +	73,1 +	63,5 +	Hurricane

THE LISTED RISKS CANNOT BE COMPLETE.

The basic rules for kiteboarding comply with those of common sense and are valid for all outdoor sports.

ENGLISH

3. RIGGING THE KITE

3.1. OVERVIEW OF THE KITE

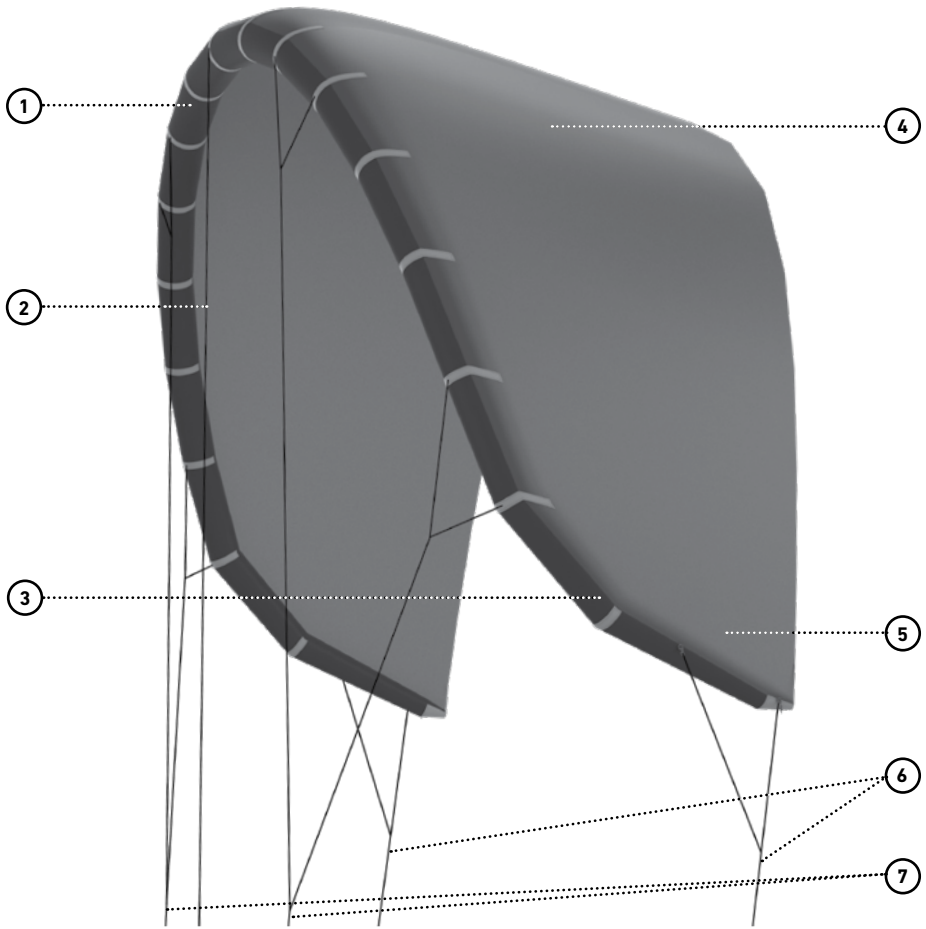

1 Leading Edge
2 Noseline
3 Dump Valve
4 Canopy
5 Tip
6 Back Pigtail
7 Front Pigtail

3.2. MONO LINE SETUP

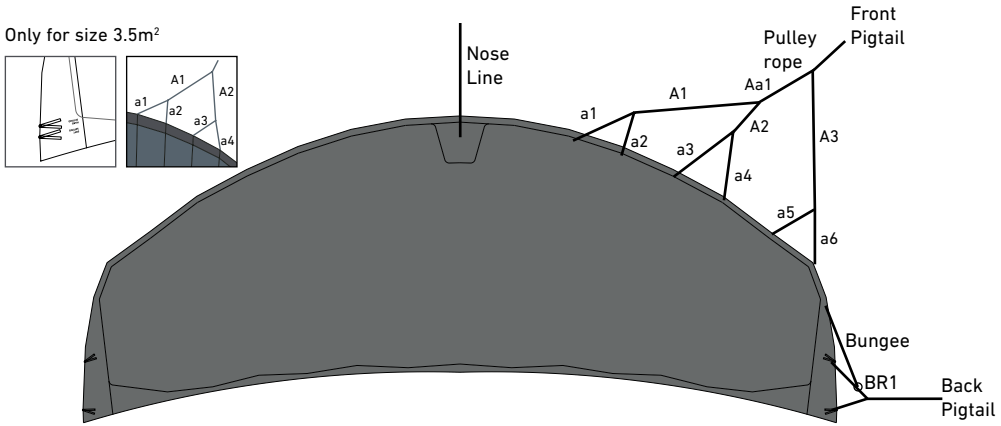

NOSELINE IS AVAILABLE AS SPARE PART AND NOT FIXED ON THE KITE.

3.3. ADAPTIVE TIP / SHEETING FORCE

SOFT SETTING

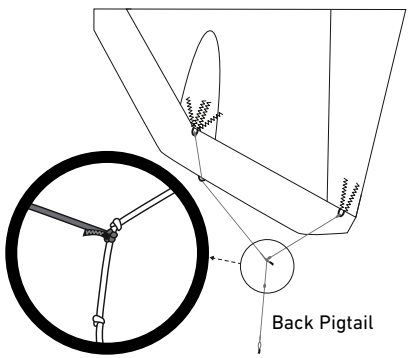

LOOP BELOW YELLOW KNOT

- Light bar load
- Kite reacts faster to turning impulse
- Kite turns tighter
- Smooth kite loops
- Softer power development

HARD SETTING

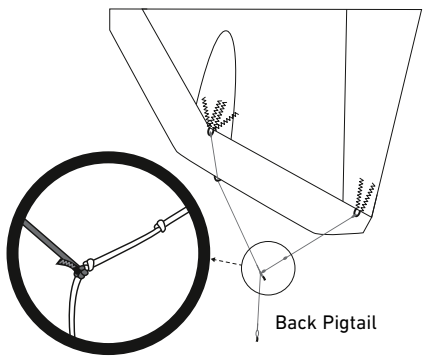

LOOP BELOW BLUE KNOT

- Heavier bar load
- More precise steering
- More kite feedback
- Powerful, dynamic turning
- Better jumping
- Aggressive kite loops

ENGLISH

3.4. INFLATING THE KITE

1. Lay the kite down on sand, grass or a surface free of hard or sharp objects as they could damage it.
2. Turn the kite with the leading edge into the wind. The bottom side of the kite is facing upwards.
3. Weigh the wingtip down with a suitable object (Kiteboard, Sand, etc.).
4. Pay attention that the dump valve at the end of the wingtip is closed.

5. Pay attention that all Lazy-Pump-Cleats at the struts are open.

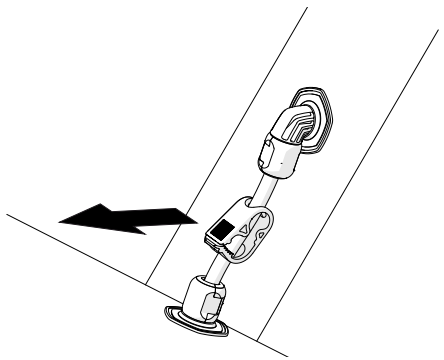

6. Inflate the complete kite until struts and leading edge reach a pressure of 6PSI.

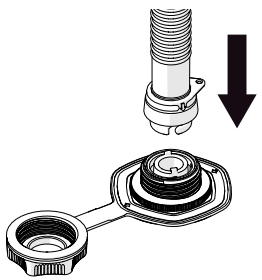

7. Close the valve.

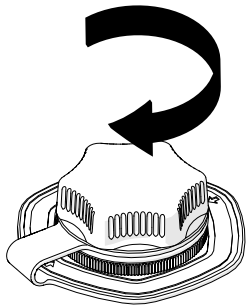

8. Squeeze the Lazy-Pump-Cleats together to cut off the struts.

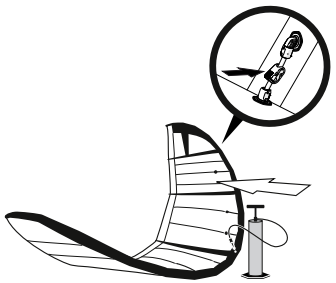

3.5. SECURING THE KITE ON THE BEACH

When the kite is not in use it has to be secured so it won't fly away.

1. Lay the kite down in areas without any sharp objects.
2. Turn the kite around so that the leading edge lies on the ground and points into the wind.

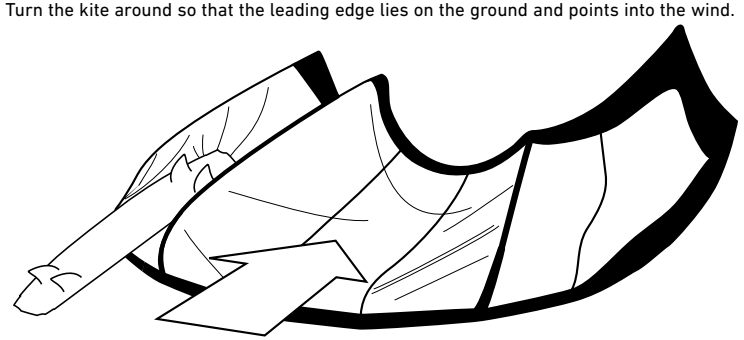

3. Weigh the kite down with sand or any other soft and heavy object.

ENGLISH

4. HOW TO USE THE AIR PORT VALVE II

INFLATION

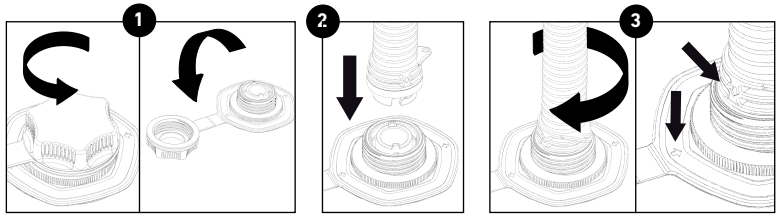

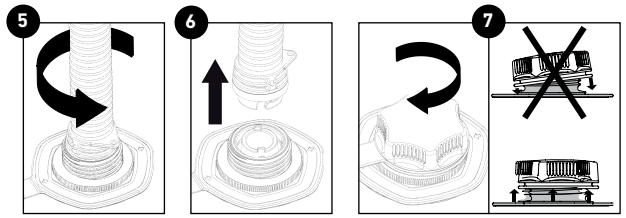

1. Unscrew and remove the valve cap.
2. Insert the end of the pump hose fully into the blue ring of the valve.
3. Turn the end of the pump hose, including the blue ring clockwise by approximately 90˚. Excessive overturning of the valve may cause internal damage to the valve system. The arrow markers on the disc and the adapter of the pump indicate how far you should turn.
4. Pump up the kite. **NOTE: Due to the manufacturing tolerances of the pump hose (in particular third-party pumps), some air might escape from the valve while pumping. This however does not effect the inflation of the kite.**
5. After inflation, turn the end of the hose (and the blue ring) approximately 90˚counterclockwise. This will activate the non-return function of the valve.
6. Remove the end of the hose from the blue ring.
7. To achieve an airtight seal, screw the valve cap onto the thread. Take note to place the valve cap correctly onto the thread for accurate fastening and sealing.

DEFLATION

1. Unscrew and remove the valve cap.

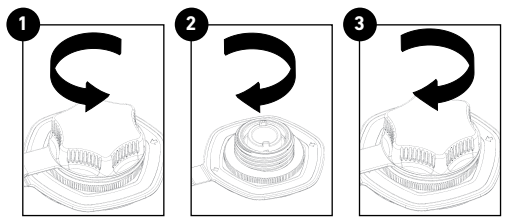

2. Turn the blue ring as far as possible in a clockwise direction. The kite will now be deflated.
3. Close the valve with the cap to avoid dirt from entering the valve.

NOTE: Should you choose to deflate the kite via the DUMP VALVE, ensure to loosen the valve cap of the Air Port Valve II before opening the dump valve. This prevents a possible rotating of the bladder in a deflated state.

5. ATTACHING THE LINES

5.1. KOOK-PROOF-SYSTEM

One of the most common mistakes in Kiteboarding is the mix up of steering and flying lines. Therefore DUOTONE has developed the Kook-Proof-System which prevents this mistake. The system works in conjunction with the Trustbar Quad Control or Trustbar 5th Element.

KOOK-PROOF-SYSTEM:
The line with the knot has to be drawn through the correct line with the larks head loop.

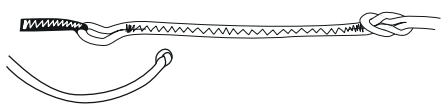

1. Attach the knot of the steering line to the larks head loop at the end of the tip.
2. Repeat this procedure for the steering lines. Here, the knot is located at the pigtail attached to the kite.

Repeat this procedure for the other side of the kite.

Pay attention that the red lines from the bar are being attached to the red attachment points on the kite. Works the same way with the grey lines. The blue fifth line has to be connected to the blue noseline attachment in the centre of the kite.

6. PACKING UP THE KITE

1. Empty the air from the kite using the dump valve at the end of the tip or using the Air Port Valve II.
2. Deflate the single struts by opening all Lazy-Pump-Cleats.
3. Roll the kite up from one wingtip to the other.
4. Fold the kite in the middle and store it in the kitebag.

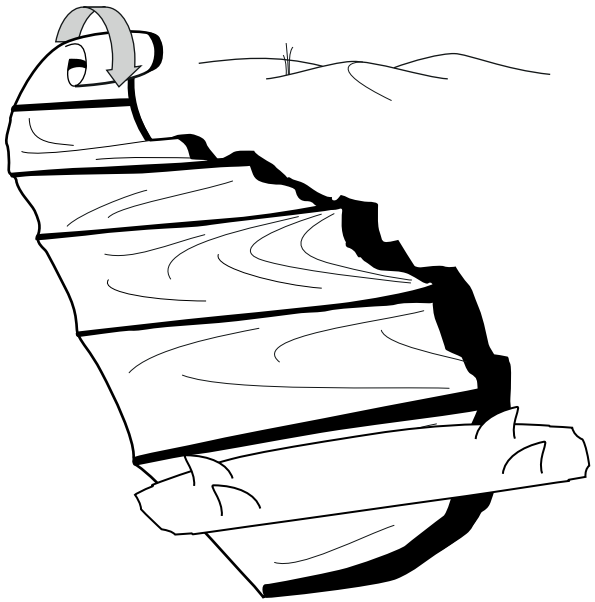

7. KITE CARE

- Avoid bringing the kite into contact with sharp-edged rocks, thorns, wood and other objects that may damage, puncture or tear the cloth.
- Do not expose the kite to excessive sun as it ages the material unnecessarily.
- Deflate the bladders if the kite is to be left unattended for any length of time.
- Avoid leaving your kite on the beach for extended lengths of time as small wind movements may quickly cause wear and tear to the cloth.
- Try to pack up the kite without cuttlings into the kitebag to avoid tearing the canopy.
- To carry a kite, turn it so that the leading edge is upwind and the underside faces upwards. Grab the centre of the leading edge tube. If the wind is blowing, it will hold the kite clear of the ground. Be sure not to drag the tips of the kite across the ground.
- A coating that results from using the kite in salt water will not damage the kite. However, rinsing in fresh water and drying doesn't hurt.
- When cleaning the kite be sure that no water, dirt, or sand gets inside the bladders.
- Be sure that the kite has dried completely before packing it up.
  Otherwise changes of color or mildew could occur.
  Such bleeding is not covered under the DUOTONE warranty.
- Do not dry the kite in direct sun!
- Keep sand and water out of the air pump.

8. HANDLING OF THE LAZY PUMP CLIP

8.1. REMOVAL OF LAZY PUMP CLIP

1. Use a small screwdriver to remove the Lazy Pump Clip. Slide the tip of the screwdriver carefully under one of the snap arms of the Lazy Pump Clip.

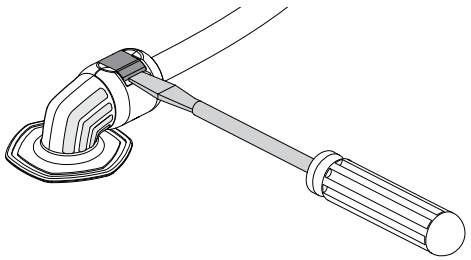

2. Rotate the tip of the screwdriver 90 degrees. The snap arm will spring open.

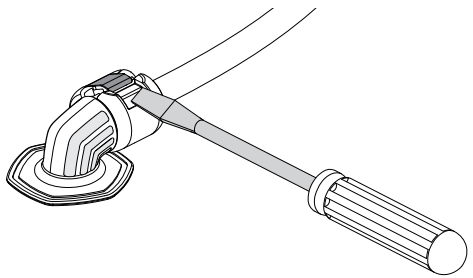

3. Repeat steps 1 and 2 on the opposite side of the clip.

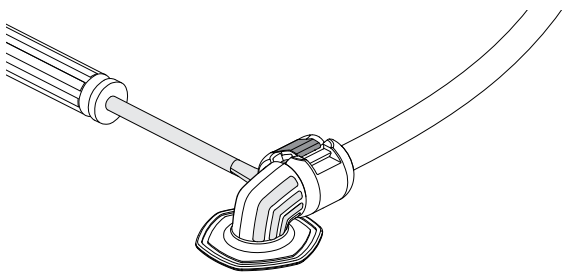

8.2. ATTACHING THE LAZY PUMP CLIP

1. Place one half of the Lazy Pump Clip on the valve so that the lower edge of the Lazy Pump Clip fits into the groove of the valve.

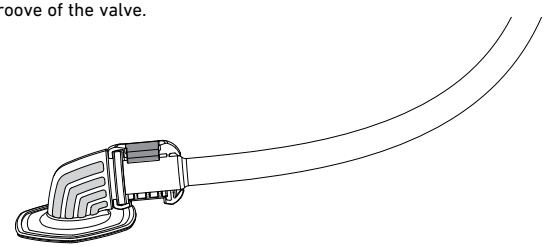

2. Place the second half of the Lazy Pump Clip on the valve so that the snap arms face the corresponding groove.

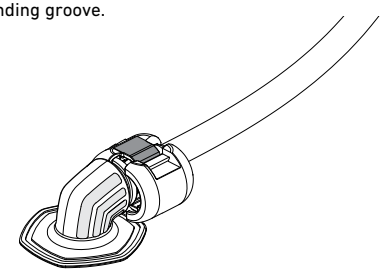

3. Press the two halves carefully together with the help of a pair of pliers.
   Both snap arms must be fully engaged so that the Lazy Pump clip is securely closed.

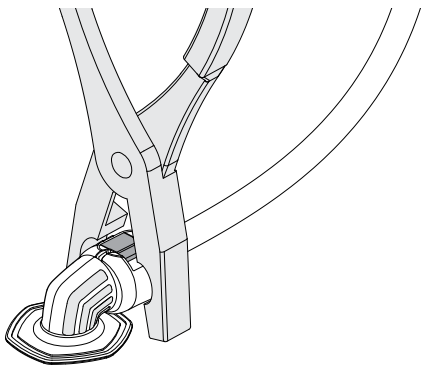

ENGLISH

9. BLADDER REPAIR

9.1. REMOVING THE LEADING EDGE BLADDER

1. Lay the kite down flat on the ground with the struts facing upwards and deflate all the struts.
2. Remove all rubber hose from the leading edge valves.

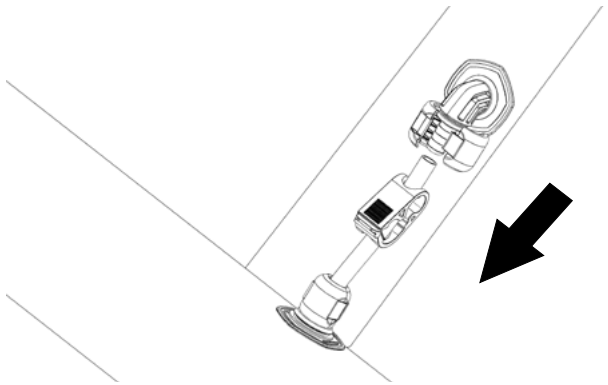

3. Open the end of the leading edge at the wing tips of the kite and pull out the bladder a few centimetres.
4. Attach a kite line to it using a larks head.

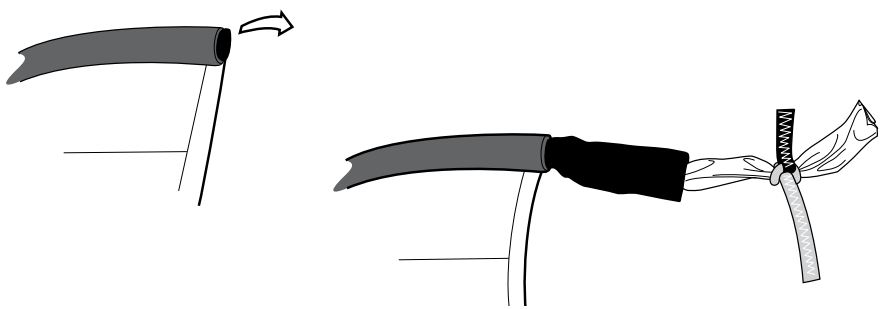

5. Open the zipper at the centre of the leading edge.
6. Push the bladder valves in the leading edge cavity.

7. Unscrew the secure ring from the Air Port Valve II using the provided tool.

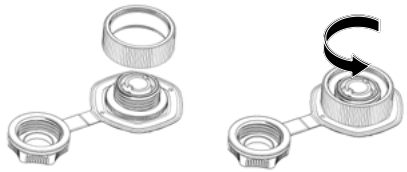

8. Push the Air Port Valve II in the leading edge cavity.

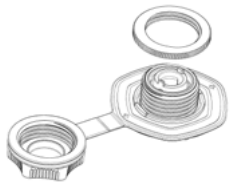

9. Remove each side of the bladder form the leading edge, leaving the kite line inside the leading edge for re-insertion.

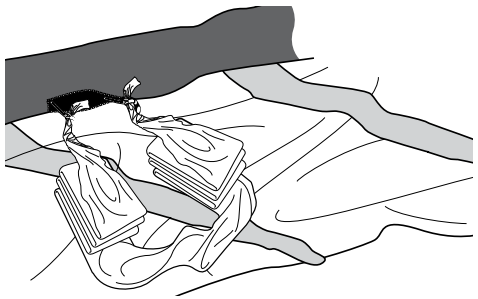

9.2. REMOVING THE STRUT BLADDERS

1. Remove the rubber hose form the strut valve.
2. Push the bladder valve in the strut cavity.

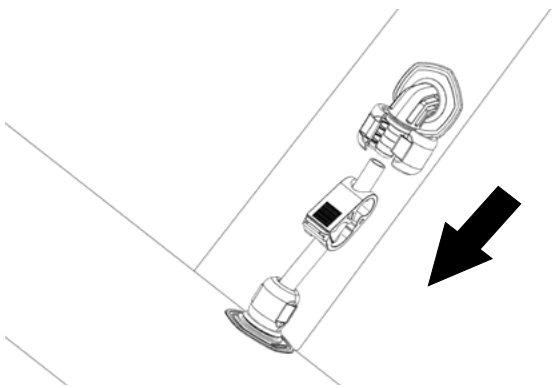

ENGLISH

3. Turn it sideways and have a close look at the front part of the strut.

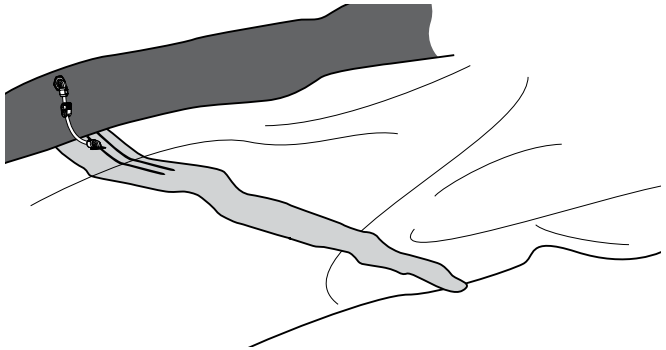

4. Disconnect the small white rope from the loop webbing.
5. Pull out the white rope carefully.

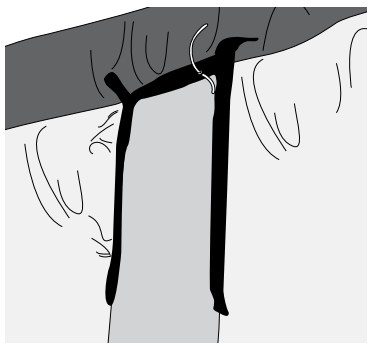

5. Take one of the flying lines and halve it. Connect the white rope to this line and secure it with two knots.

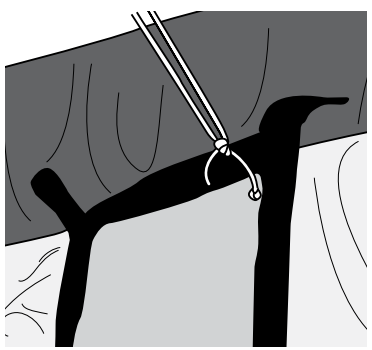

7. Turn the strut over to the other side and push the valve into the strut.
8. Ensure that the valve can move inside the strut freely.

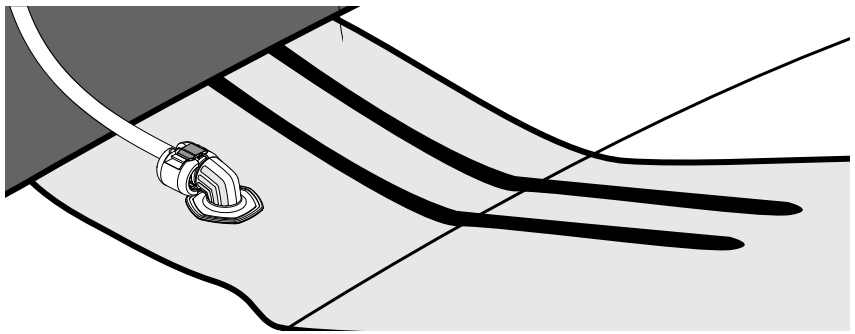

9. Now have a look at the strut end.
10. Remove the strut flap and pull carefully on the bladder.
11. Ensure that the flying line you attached at the front of the strut can slide through the strut hole easily.

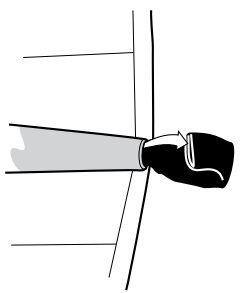

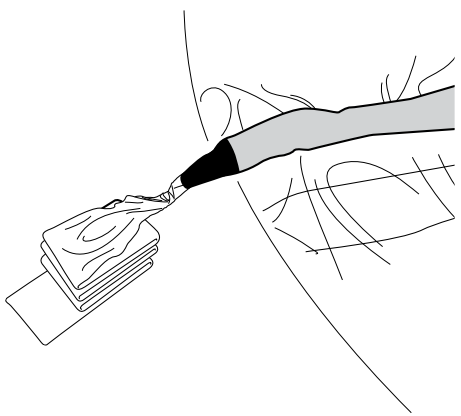

ENGLISH

12. Pull out the entire bladder through the strut end.

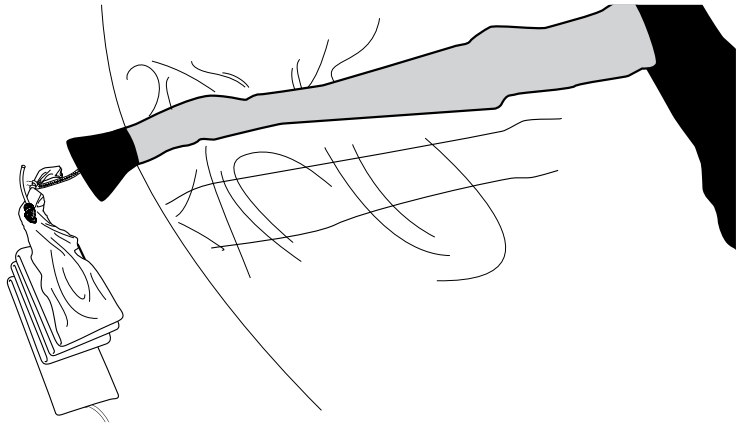

13. Remove the flying line from the bladder, ensuring that you keep the flying line inside the strut in order to be able to replace the bladder again.
14. To reinstall please follow the above steps backwards.

9.3. BLADDER REPAIR

For repairing small holes we recommend using the repair kit from DUOTONE.

1. Inflate the bladder and wipe it with a sponge soaked in soapy water or submerge portions of the bladder in a tub of water. Air bubbles indicate holes.
2. Mark the hole and deflate the bladder.
3. Dry the bladder around the hole.

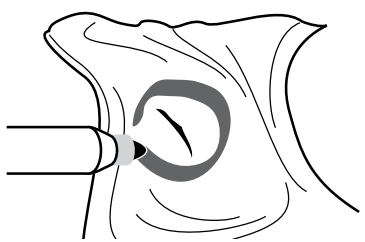

4. For small holes use the self-adhesive repair patches.

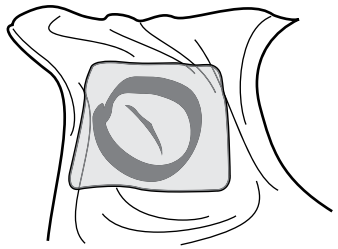

5. For bigger holes: cut a round patch out of the enclosed tube material.
6. Spread the patch and the damaged area with a thin layer of contact glue and let both sides begin to dry.
7. Now press both sides together.

9.4. RE-INSERTING LEADING EDGE BLADDER

1. Before you begin to reinsert the bladder make sure the air valves are aiming in the direction of the valve openings.
2. Fold the bladder according the picture and lay the folded bladder in front of the zipper of the leading edge.

ENGLISH

3. Pull carefully on the line coming out of the middle of the leading edge and feed the bladder back into the cavity.
4. Be sure that it is inserted correctly without twisting.
5. When the bladder is completely inserted, make sure that the air valves are positioned correctly in the valve openings.

6. Position the Air Port Valve II in the valve opening. Make sure that the 2 pins of the valve are positioned correctly into the leading edge.

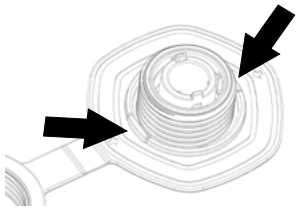

7. Screw the secure ring back onto the valve.

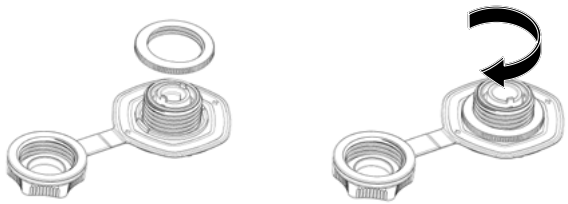

8. Re-attach the rubber hoses to the leading edge valves.

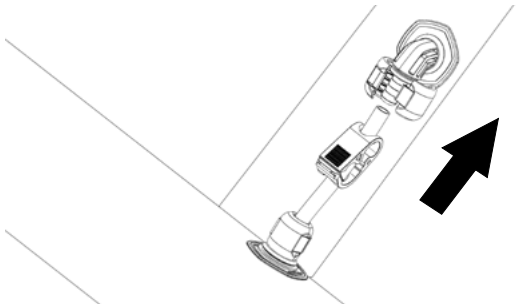

9. Close all lazy-pump-cleats.
10. Fill the leading edge with air carefully.
11. Check that the bladder has been correctly inserted and look for wrinkles in the material. If you detect any irregularities in the air tube or if the valve is not positioned correctly, deflate and start over again.
12. Roll up the excess bladder and close the flaps at the wing tips.

10. WINDSPEED AND KITE SIZE

This kite is superbly easy to water re-launch and offers easy, predictable performance. Only a few knots of wind speed is required to fly this kite.
Kiteboarding, however, generally requires more wind, depending not only on rider ability but also the size of kite, rider and board.

The following table demonstrates the approximate average wind speeds in which kites of different sizes can be used by kiteboarders of various skill levels and weights. Riders who are significantly heavier or lighter should use, for a given wind speed range, kites that are one size bigger or smaller respectively. These represent a rough guide only.

SIZE	FREERIDE [KN]	FOIL [KN]	LINE LENGTH RECOMMENDATION [M]
3.5	27-41	17-33	20-22
5	23-37	15-30	20-22
7	19-33	12-24	20-22
9	16-30	11-18	22-24
11	14-25	10-16	22-24
13	11-21	9-14	22-24
15	9-18	8-13	22-24

11. WARRANTY POLICY

- DUOTONE Warrants this product to be free of major defects in material or workmanship to the original purchaser for a period of six months from the original date of purchase. This warranty is subject to the following limitations:
  The warranty is valid only when the product is used for kiteboarding on water and does not cover products used in rental or teaching operations.
- DUOTONE will make the final warranty determination, which may require inspection and/or photos of the equipment, which clearly show the defect(s). If necessary, this information must be sent to the DUOTONE distributor in your country, postage prepaid.
- If a product is deemed to be defective by DUOTONE, the warranty covers the repair or replacement of the defective product only.
- DUOTONE will not be responsible for any costs, losses or damages incurred as a result of loss of use of this product. The warranty does not cover damage caused by misuse, abuse, neglect or normal wear and tear including but not limited to, rigging with other than DUOTONE components, damage due to excessive sun exposure, damage caused by improper handling or storage, damage caused by use in the waves or shore break and damage caused by anything other than defects in material and workmanship.
- This warranty is voided if any unauthorized repair, change or modification has been made to any part of the equipment.
  The warranty for any repaired or replaced equipment is good from the date of the original purchase only.
  The original purchase receipt must accompany all warranty claims.
  The name of the retailer and date of purchase must be clear and legible.
  There are no warranties that extend beyond the warranty specified herein.

WARRANTY CLAIMS

- Warranty claims must be processed and be issued a return authorization prior to shipping to DUOTONE.

For further information please visit:
www.duotonesports.com

All Pic's: DUOTONE
Online Version
2024 V1