

Home Solutions by Systemair

SAVE Technical Presentation for Professionals

systemair

Energy-efficient ventilation for all kinds of homes

The Eurovent-certified SAVE series includes a wide selection of energy-efficient ventilation units with modern designs to suit both houses and apartment blocks. All SAVE units surpass market requirements for a healthy indoor climate and low energy consumption. All units are suitable for use in both new and renovated buildings and always come preprogramed, tested and ready to install. All you have to do is "plug & breathe".

Air handling unit		SAVE VTC 200-1 (E)**	SAVE VTC 300 (E)**	SAVE VTC 500 (E)**	SAVE VTC 700 (E)**
					
Energy efficiency class					
Standard unit		A	A	A	A
Standard unit with accessories		A	A+	A	A+
Technical data					
Design up to living space	m^2	180	240	400	550
Qref at 50 Pa	l/s m^3/h	56/200	71/255	117/421	166/599
Qmax at 100 Pa	l/s m^3/h	79/285	101/364	167/602	237/856
Sound power level (LwA)	dB(A)	47	40	44	41
Efficiency heat recovery	%	84/83 (E)**	86/83 (E)**	84/81 (E)**	87/79 (E)**
Filter, Supply air		F7/ePM1 60%	F7/ePM1 60%	F7/ePM1 60%	F7/ePM1 60%
		F8/ePM1 70%*	F8/ePM1 70%*	F8/ePM1 70%*	F8/ePM1 70%*
Filter, Extract air		M5/ePM10 50%	M5/ePM10 50%	M5/ePM10 50%	M5/ePM10 50%
Duct connections	mm	125	160	200	250
Max. power, fan(s)	W	81	85	169	170
Electrical heater	W	-	1670*	1670*	4500*
Recommended fuse	A	10	10	13	10
Width (with connection box)	mm	-	-	-	-
Width (without connection box)	mm	598	762	880	1170
Height (with connection box)	mm	629	883	880	1250
Height (without connection box)	mm	550	800	800	1175
Depth	mm	550	615	615	860
Weight	kg	47	72	82	151
Isolation of casing	mm	30	30	30	30
Condensate connection		1/2" (2x)	1/2" (2x)	1/2" (2x)	1/2" (2x)
Application					
Flats		•			
Single-family house		•	•	•	
Apartment building, centrally					•
Light commercial			•	•	•
Built in cooker hood					
Connection for external cooker hood					

* Available as accessories.
** Enthalpy version.



Air handling unit		SAVE VSC 100 (E)**	SAVE VSC 200 (E)**	SAVE VSC 300 (E)**
Energy efficiency class				
Standard unit		A	A	A
Standard unit with accessories		A+	A	A
Technical data				
Design up to living space	m^2	100	200	320
Qref at 50 Pa	l/s m^3/h	32/116	65/233	99/358
Qmax at 100 Pa	l/s m^3/h	46/166	93/333	142/511
Sound power level (LwA)	dB(A)	36	45	46
Efficiency heat recovery	%	86/85 (E)**	89/83 (E)**	85/79 (E)**
Filter, Supply air		F7/ePM1 60%	F7/ePM1 60%	F7/ePM1 60%
		F8/ePM1 70%*	F8/ePM1 70%*	F8/ePM1 70%*
Filter, Extract air		M5/ePM10 50%	M5/ePM10 50%	M5/ePM10 50%
Duct connections	mm	125	125	160
Max. power, fan(s)	W	27	81	115
Electrical heater	W	-	-	-
Recommended fuse	A	10	10	10
Width (with connection box)	mm	1263	1473	1473
Width (without connection box)	mm	1220	1430	1430
Height (with connection box)	mm	-	-	-
Height (without connection box)	mm	258	328	355
Depth	mm	640	750	840
Weight	kg	47	70	80
Isolation of casing	mm	20	20	20
Condensate connection		1/2" (2x)	1/2" (2x)	1/2" (2x)
Application				
Flats		•	•	
Single-family house			•	•
Apartment building, centrally				
Light commercial				•
Built in cooker hood				
Connection for external cooker hood				

*Available as accessories.
** Enthalpy version.



Air handling unit		SAVE VTR 100/B	SAVE VTR 150/B		SAVE VTR 150/K		SAVE VTR 275/B
Energy efficiency class							
Standard unit		A	A		A		A
Standard unit with accessories		A	A		A		A
Technical data			Right	Left	Right	Left	
Design up to living space	m^2	100	115	115	115	115	200
Qref at 50 Pa	l/s m^3/h	29/106	50/181	54/195	50/181	54/195	61/221
Qmax at 100 Pa	l/s m^3/h	41/151	72/258	77/278	72/258	77/278	88/316
Sound power level (LwA)	dB(A)	42	41	43	41	43	40
Efficiency heat recovery	%	85	79	79	79	79	79
Filter, Supply air		F7/ePM1 60%	F7/ePM1 60%	F7/ePM1 60%	F7/ePM1 60%	F7/ePM1 60%	F7/ePM1 60%
		F8/ePM1 70%*	F8/ePM1 70%*	F8/ePM1 70%*	F8/ePM1 70%*	F8/ePM1 70%*	F8/ePM1 70%*
Filter, Extract air		M5/ePM10 50%	M5/ePM10 50%	M5/ePM10 50%	M5/ePM10 50%	M5/ePM10 50%	M5/ePM10 50%
Duct connections	mm	125	125	125	125	125	125
Max. power, fan(s)	W	35	81	81	81	81	81
Electrical heater	W	250*	500/1000		500/1000		500/1000
Recommended fuse	A	10	10	10	10	10	10
Width (with connection box)	mm	-	-	-	-	-	-
Width (without connection box)	mm	561	596	596	596	596	598
Height (with connection box)	mm	679	707	707	800	800	
Height (without connection box)	mm	600	630	630	720	720	580
Depth	mm	322	368	368	465	465	450
Weight	kg	39	46	46	61	61	46
Isolation of casing	mm	30	30	30	30	30	30
Condensate connection		-	-	-	-	-	-
Application							
Flats		•	•	•	•	•	•
Single-family house			•	•	•	•	•
Apartment building, centrally							
Light commercial							
Built in cooker hood					•	•	
Connection for external cooker hood		•	•	•			•

*Available as accessories.

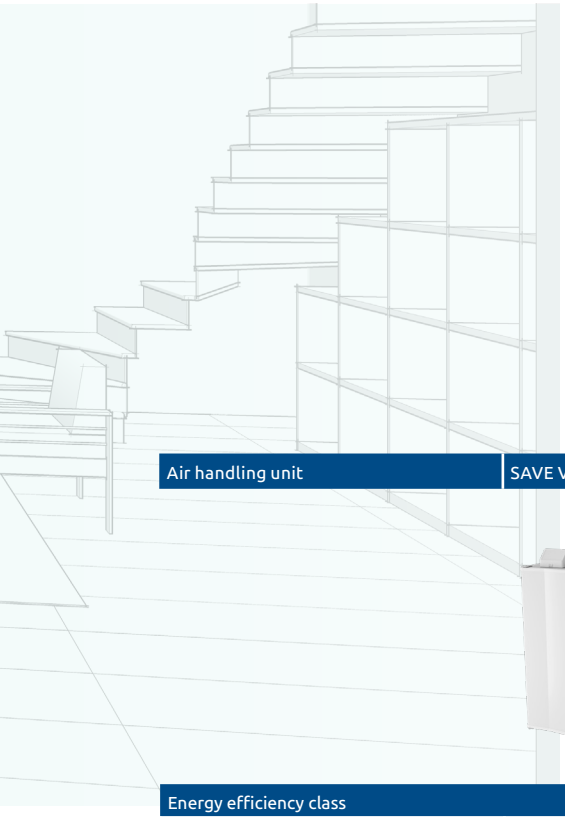

Air handling unit		SAVE VTR 350/B	SAVE VTR 500	SAVE VTR 700
				
Energy efficiency class				
Standard unit		A	A	A
Standard unit with accessories		A	A	A+
Technical data				
Design up to living space	m^2	300	400	550
Qref at 50 Pa	l/s m^3/h	98/353	111/400	185/666
Qmax at 100 Pa	l/s m^3/h	140/504	159/571	264/951
Sound power level (LwA)	dB(A)	44	46	41
Efficiency heat recovery	%	82	84	82
Filter, Supply air		F7/ePM1 60%	F7/ePM1 60%	F7/ePM1 60%
		F8/ePM1 70%*	F8/ePM1 70%*	F8/ePM1 70%*
Filter, Extract air		M5/ePM10 50%	M5/ePM10 60%	M5/ePM10 50%
Duct connections	mm	160	200	250
Max. power, fan(s)	W	169	170	170
Electrical heater	W	1670	1670	1670*
Recommended fuse	A	13	13	13
Width (with connection box)	mm	-	-	-
Width (without connection box)	mm	762	920	1170
Height (with connection box)	mm	878	885	1250
Height (without connection box)	mm	802	800	1175
Depth	mm	490	584	860
Weight	kg	66	85	188
Isolation of casing	mm	30	30	30
Condensate connection		-	-	1/2"
Application				
Flats				
Single-family house		•	•	
Apartment building, centrally				•
Light commercial		•	•	•
Built in cooker hood				
Connection for external cooker hood		•		

*Available as accessories.

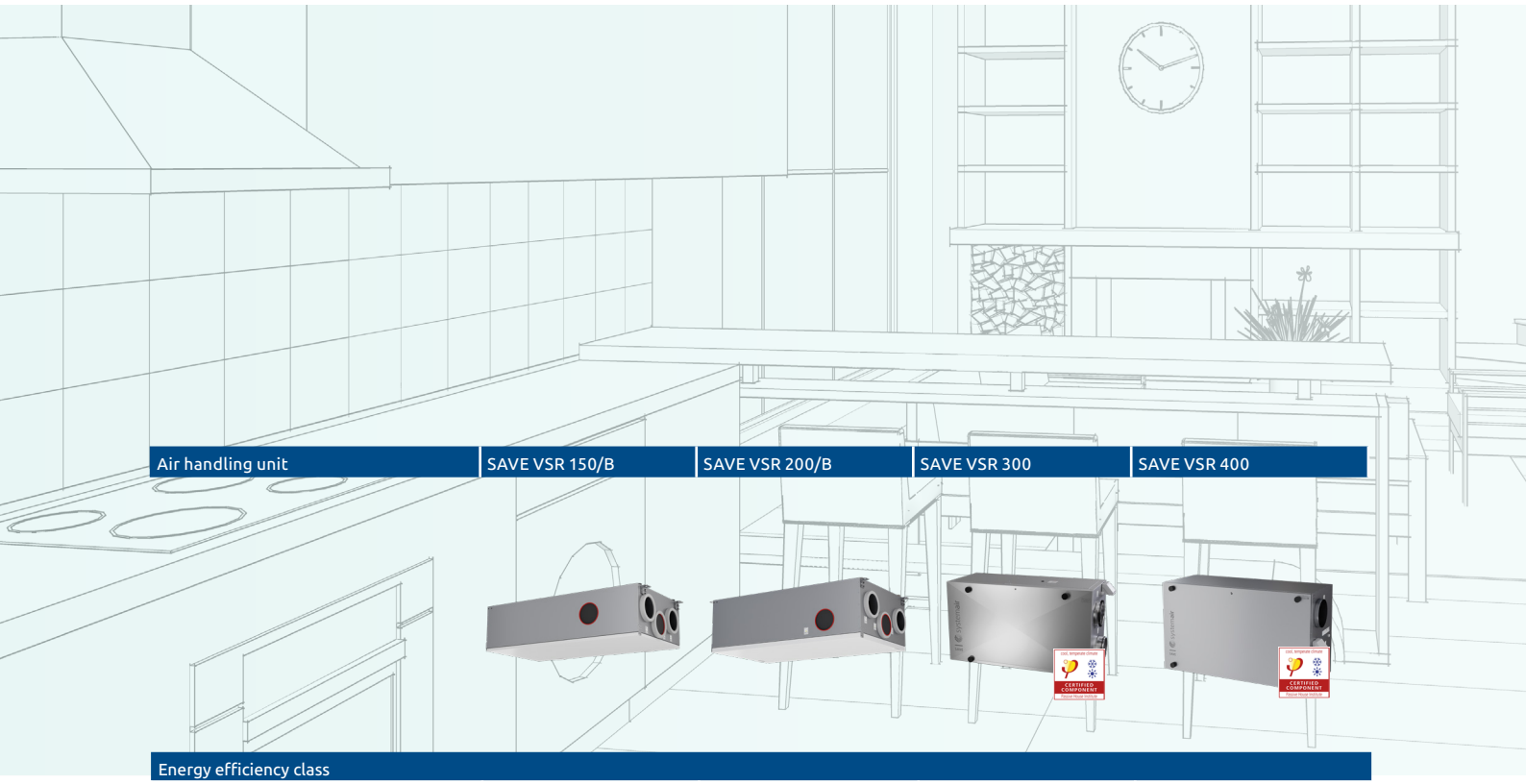

Air handling unit		SAVE VSR 150/B	SAVE VSR 200/B	SAVE VSR 300	SAVE VSR 400
Energy efficiency class					
Standard unit		A	A	A	A
Standard unit with accessories		A	A	A	A
Technical data					
Design up to living space	m²	100	180	240	400
Qref at 50 Pa	l/s m³/h	33/118	55/199	71/257	119/430
Qmax at 100 Pa	l/s m³/h	48/168	79/284	102/367	170/615
Sound power level (LwA)	dB(A)	35	43	43	45
Efficiency heat recovery	%	85	83	85	83
Filter, Supply air		F7/ePM1 60%	F7/ePM1 60%	F7/ePM1 60%	F7/ePM1 60%
		F8/ePM1 70%*	F8/ePM1 70%*	F8/ePM1 70%*	F8/ePM1 70%*
Filter, Extract air		M5/ePM10 50%	M5/ePM10 50%	M5/ePM10 50%	M5/ePM10 50%
Duct connections	mm	125	125	160	200
Max. power, fan(s)	W	35	81	81	169
Electrical heater	W	500	1000	1670	1670
Recommended fuse	A	10	10	10	13
Width (with connection box)	mm	1215	1215	1177	1280
Width (without connection box)	mm	1150	1172	1150	1200
Height (with connection box)	mm	-	-	-	-
Height (without connection box)	mm	303	350	595	680
Depth	mm	586	620	505	510
Weight	kg	49	56	65	80
Isolation of casing	mm	30	30	50	50
Condensate connection		-	-	-	-
Application					
Flats		•	•		
Single-family house			•	•	•
Apartment building, centrally					
Light commercial				•	•
Built in cooker hood					
Connection for external cooker hood		•	•		

*Available as accessories.

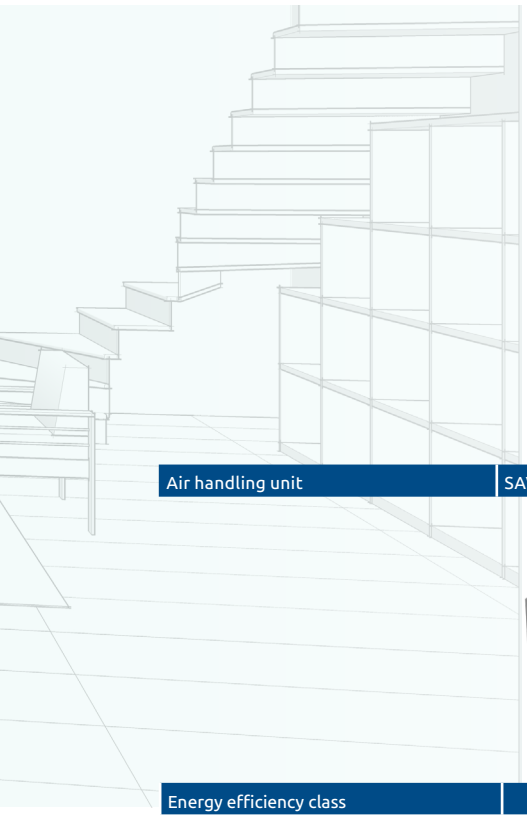

Air handling unit		SAVE VSR 500	SAVE VSR 700	SAVE VSR 700 Ceiling
		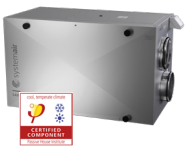		
Energy efficiency class				
Standard unit		A	A	A
Standard unit with accessories		A	A+	A+
Technical data				
Design up to living space	m^2	400	550	700
Qref at 50 Pa	l/s m^3/h	118/426	169/609	194/697
Qmax at 100 Pa	l/s m^3/h	168/608	242/870	277/996
Sound power level (LwA)	dB(A)	53	44	53
Efficiency heat recovery	%	84	83	84
Filter, Supply air		F7/ePM1 60%	F7/ePM1 60%	F7/ePM1 60%
		F8/ePM1 70%*	F8/ePM1 70%*	F8/ePM1 70%*
Filter, Extract air		M5/ePM10 50%	M5/ePM10 50%	M5/ePM10 50%
Duct connections	mm	200	250	250
Max. power, fan(s)	W	169	170	170
Electrical heater	W	1670	1670	1670
Recommended fuse	A	13	13	13
Width (with connection box)	mm	1177	1480	1320
Width (without connection box)	mm	1150	1400	1240
Height (with connection box)	mm	-	-	-
Height (without connection box)	mm	645	710	830
Depth	mm	595	748	420
Weight	kg	77	120	97
Isolation of casing	mm	50	50	50
Condensate connection		-	-	-
Application				
Flats				
Single-family house		•		
Apartment building, centrally			•	•
Light commercial		•	•	•
Built in cooker hood				
Connection for external cooker hood				

*Available as accessories.

SAVE VTC 200-1

Condensation and enthalpy model



- High efficiency condensation and enthalpy heat exchanger with high performance EC fans
- Demand ventilation control is standard with the built in humidity sensor
- Automatic defrosting
- Preheater needed for outdoor temperature < -3°C/-10°C (E)
- Selection of different control panels available:
  - SAVE TOUCH for full functionality
  - SAVE LIGHT for basic functionality
- Connection board for easy access
- Modbus communication RS-485 as standard

Mid-frequency band, Hz									
LwA dB(A)	**Tot**	63	125	250	500	1k	2k	4k	8k
Supply air	**70**	79	79	73	67	64	58	49	39
Extract air	**60**	71	59	66	54	51	39	26	25
Surrounding	**47**	46	50	54	39	33	30	27	26

The sound data table indicates the sound power level LwA, which should not be confused with the sound pressure level LpA (based on the operation point - 56 l/s at 50 Pa).

Performance data (Right unit)

Supply air

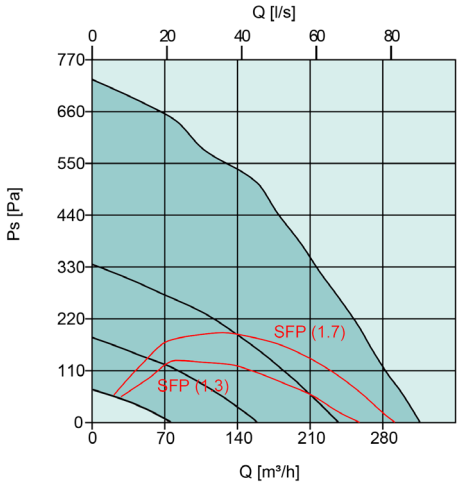

Extract air

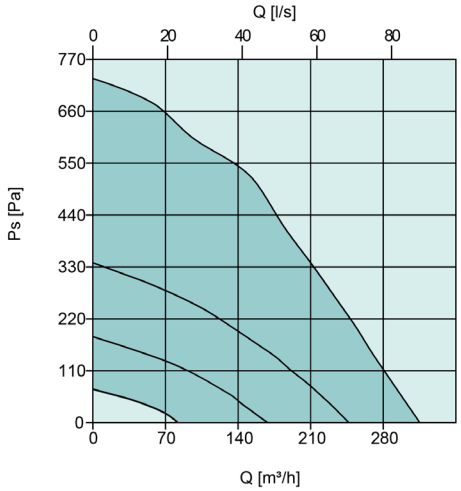

SAVE VTC 200-1 (condensation) or SAVE VTC-E 200-1 (enthalpy) is a top connected counter flow unit designed for installation on the wall in laundry rooms, storerooms etc. in a home with a ventilated area of up to approx. 180 m2.

VTC 200-1 or VTC-E 200-1 unit is white painted, fully insulated and comes with complete control functionality. The unit automatically regulates the recovery of heating/ cooling by the built in damper and has automatic defrosting function.

SAVE CONNECT internet access module is delivered as standard with all units for remote control via mobile APP.

SAVE PRO web application for own or client device remote monitoring, control and troubleshooting.

Download SAVE CONNECT app via Google Play or Apple store.

Technical data SAVE VTC 200-1 and VTC-E 200-1			
Art. no. (condensation)	Right/Left	488861/488862	
Art no. (enthalpy)	Right/Left	488903/488904	
Energy efficiency class			
Standard unit		A	
Standard unit with accessories*		A	
Voltage/Frequency	V/50 Hz	230	
Power rating per fan	W	34	
at example duty point:		56 l/s at 50 Pa	
		200 m³/h at 50 Pa	
SFP	kW/m³/s	1.22	
Efficiency according EN 13141-7		84%	83% (E)**
Fuse	A	10	
Input power, fan motor	W	2 x 81	
Filter, supply air			
Pleat filter (PF)		ePM1 60%	
Filter, extract air			
Pleat filter (PF)		ePM10 50%	
Weight	kg	47	48 (E)**

* With Indoor Air Quality accessories
** (E) - Enthalpy version

SFP = Specific Fan Power (kW/m³/s)
The SFP value stated applies to the complete unit.

Scheme

Right-hand version

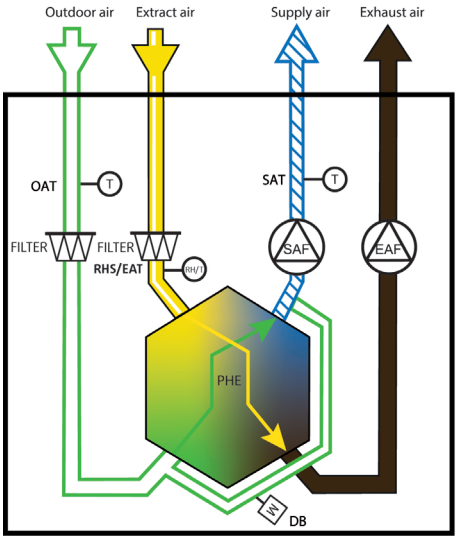

SAF	Supply fan
EAF	Extract fan
FILTER	Extract/Supply filter
OAT	Outdoor air temp. sensor
SAT	Supply air temp. sensor
RHS/EAT	Relative humidity sensor/Extract air temp. sensor
DB	Bypass damper drive
PHE	Plate Heat Exchanger

Dimensions

SAVE VTC 200-1 Right-hand version

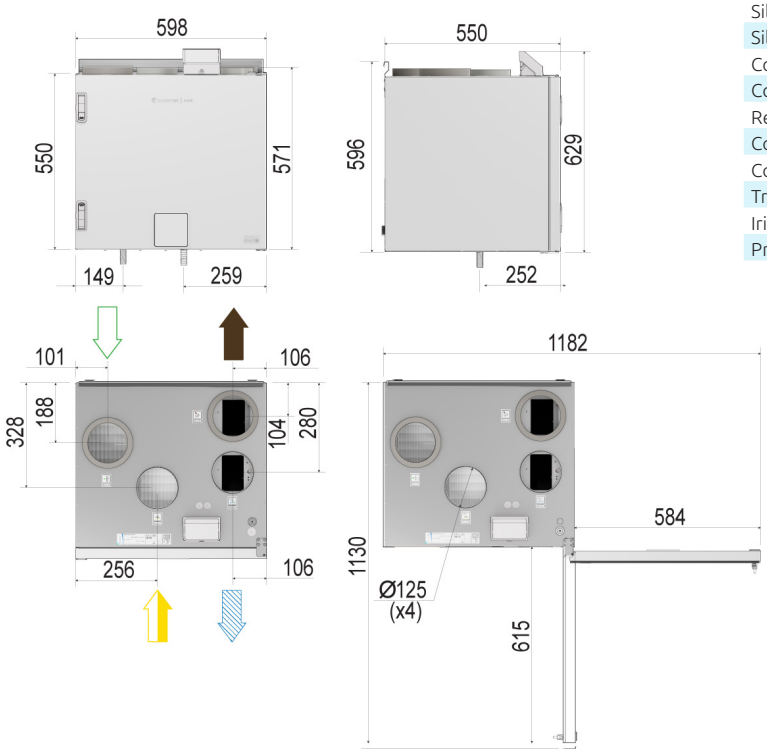

Accessories

Accessories SAVE VTC 200-1 and SAVE VTC-E 200-1		Art. no.
Controls		
SAVE TOUCH White	Touch display white	138077
SAVE TOUCH Black	Touch display black	138078
SAVE LIGHT White	SAVE Light White	319118
SAVE LIGHT Black	SAVE Light Black	319119
SAVE Wall Mounted Kit	Control panel frame	140736
CEC Cable 12m	VK-12	24782
CEC Cable 6m	VK-6	24783
Diverting Plug	Diverting Plug	37367
Indoor Air Quality Wired		
Systemair-E CO2 sensor	T8100-E-SA-1000RTD	14904
Systemair-E CO2 + RH + Temperature	T8100-E-H-SA-10R	211522
Systemair-1 CO2 duct sensor	T8041	14906
Duct sensor NTC10K (-30-70C) 1,5 m	TG-K3/NTC10-01	211524
Room sensor NTC10K (0-50C)	TG-R5/NTC10-01	211525
Presence detector	-	6995
VAV/CAV conversion kit	-	140777
Heating/Cooling		
Duct Water heating battery 2 Rows	VBC 125-2	5457
Duct Water heating battery 3 Rows	VBC 125-3	9839
Surface sensor NTC10K (-30-150C) 1,5 m	TG-A1/NTC10-01	211523
Actuator 0-10V	RVAZ4 24A	9862
2-Way-Valve	ZTV 15-0,4	9829
2-Way-Valve	ZTV 15-0,6	6571
3-Way-Valve	ZTR 15-0,4	9670
3-Way-Valve	ZTR 15-0,6	6573
Electrical duct heater	CB 125-0.6 230V/1	5289
Electrical duct heater	CB 125-1.2 230V/1	5290
Electrical duct heater	CB 125-1.8 230V/1	5377
Preheater KIT 230V	1-Phase kit	142852
Duct cooler	CWK 125-3-2.5	30021
Filters		
PF VTC 200-1 STD kit	F7/ePM1 60% Supply M5/ePM10 50% Extract	398081
PF VTC 200-1 OPT kit	F8/ePM1 70% Supply M5/ePM10 50% Extract	398082
Other		
Combi grille 125, White	CVVX 125, white	26422
Combi grille 125, Black	CVVX 125, black	26421
Outdoor grille Ø125 White	-	477990
Outdoor grille Ø125 Black	-	486800
Outdoor grille Ø125 Magnelis	-	487400
Fast clamp 125	FK 125	1608
Connection duct D 125/1,0 M/F	SCD Flexible Silencer	2556
Silencer	LDC 125-600	5190
Silencer	LDC 125-900	5191
Control damper	TUNE-R-125-3-M1	311938
Control damper (Spring)	TUNE-R-125-3-M4	311968
Relay mounting kit	RMK Kit Systemair	576801
Control damper	TUNE-R-125-3-M2	311948
Control damper (Spring)	TUNE-R-125-3-M5	311978
Transformer 24V	PSS48 24V	204385
Iris Damper	SPI-125 C	6751
Pressure guard with pitot tube	DPR200T	212987

Supply
Exhaust
Fresh air/supply
Extract

*** Drainage connection

SAVE VTC 300

Condensation and enthalpy model



- High efficiency condensation and enthalpy heat exchanger with high performance EC fans
- Demand ventilation control is standard with the built in humidity sensor
- Automatic defrosting
- Preheater needed for outdoor temperature < -5°C/-10°C (E)
- Selection of different control panels available:
  - SAVE TOUCH for full functionality
  - SAVE LIGHT for basic functionality
- Connection board for easy access
- Modbus communication RS-485 as standard
- Built in electrical re-heater as accessory

Mid-frequency band, Hz									
LwA dB(A)	**Tot**	63	125	250	500	1k	2k	4k	8k
Supply air	**61**	70	65	61	56	52	56	49	44
Extract air	**48**	66	55	51	43	40	36	25	25
Surrounding	**40**	43	41	42	33	31	32	33	28

The sound data table indicates the sound power level LwA, which should not be confused with the sound pressure level LpA (based on the operation point - 71 l/s at 50 Pa).

Performance data (Right unit)

Supply air

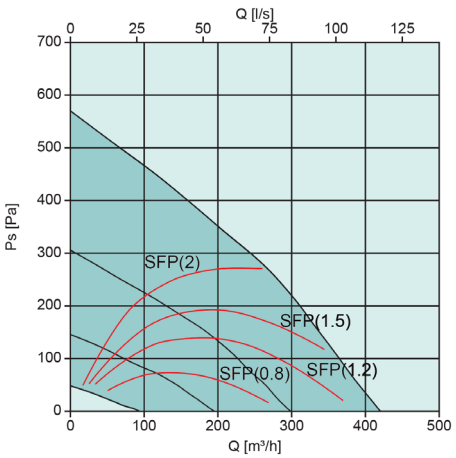

Extract air

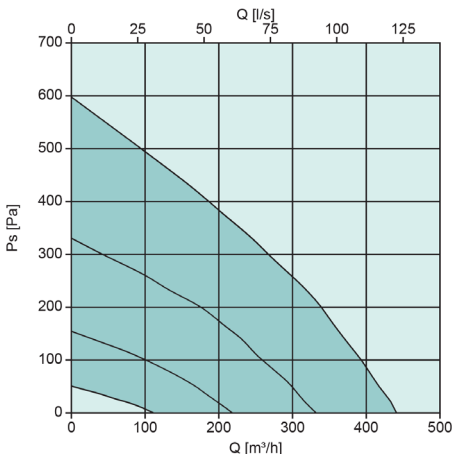

SAVE VTC 300 (condensation) or SAVE VTC-E 300 (enthalpy) is a top connected counter flow unit designed for installation on the wall in laundry rooms, storerooms etc. in a home with a ventilated area of up to approx. 240 m^2.

VTC 300 or VTC-E 300 is white painted, double skinned, fully insulated and comes with control panel with complete control functionality. The unit automatically regulates the recovery of heating/cooling by the built in damper and has automatic defrosting function.

SAVE CONNECT internet access module is delivered as standard with all units for remote control via mobile APP.

SAVE PRO web application for own or client device remote monitoring, control and troubleshooting.

Download SAVE CONNECT app via Google Play or Apple store.

Technical data SAVE VTC 300 and VTC-E 300		
Art. no. (condensation)	Right/Left	488840/488841
Art. no. (enthalpy)	Right/Left	488905/488906
Energy efficiency class		
Standard unit		A
Standard unit with accessories*		A+
Voltage/Frequency	V/50 Hz	230
Power rating per fan	W	32
at example duty point:		71 l/s at 50 Pa
		255 m^3/h at 50 Pa
SFP	kW/m^3/s	0,9
Efficiency according EN 13141-7		86% 83% (E)**
Fuse	A	10
Input power, fan motor	W	2 x 85
Filter, supply air		
Pleat filter (PF)		F7/ePM1 60%
Filter, extract air		
Pleat filter (PF)		M5/ePM10 50%
Weight	kg	72

* With Indoor Air Quality accessories
** (E) - Enthalpy version

SFP = Specific Fan Power (kW/m^3/s)
The SFP value stated applies to the complete unit.

Scheme

Right-hand version

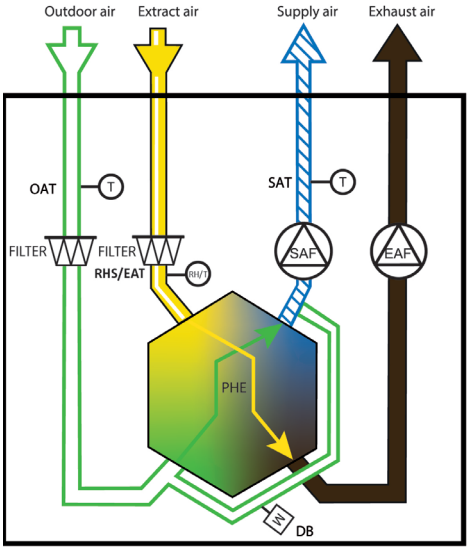

SAF	Supply fan
EAF	Extract fan
FILTER	Extract/Supply filter
OAT	Outdoor air temp. sensor
SAT	Supply air temp. sensor
RHS/EAT	Relative humidity sensor/Extract air temp. sensor
DB	Bypass damper drive
PHE	Plate Heat Exchanger

Dimensions

SAVE VTC 300 Right-hand version

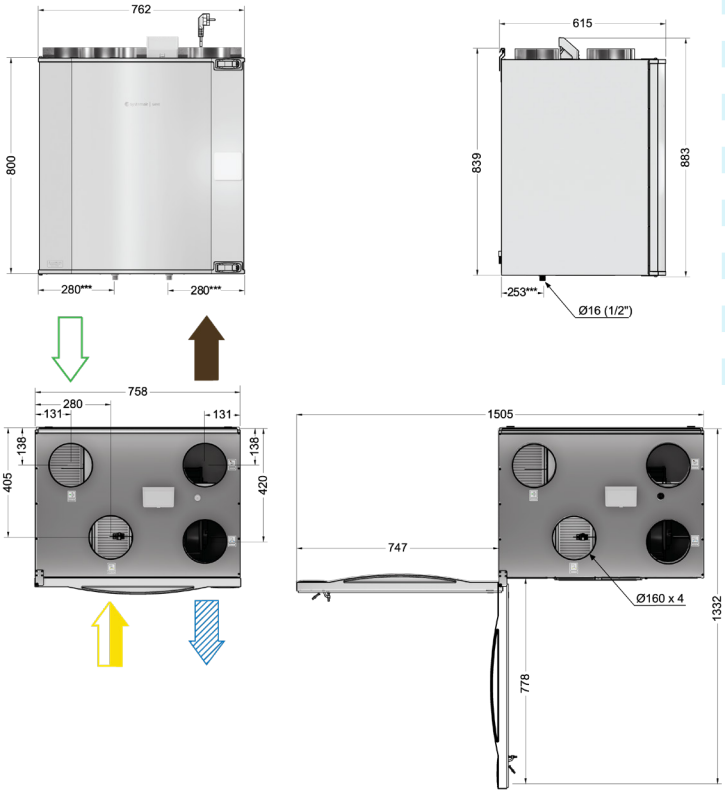

Accessories

Accessories SAVE VTC 300 and SAVE VTC-E 300		Art. no.
Controls		
SAVE TOUCH White	Touch display white	138077
SAVE TOUCH Black	Touch display black	138078
SAVE LIGHT White	SAVE Light White	319118
SAVE LIGHT Black	SAVE Light Black	319119
SAVE Wall Mounted Kit	Control panel frame	140736
CEC Cable 12m	VK-12	24782
CEC Cable 6m	VK-6	24783
Diverting Plug	Diverting Plug	37367
Indoor Air Quality Wired		
Systemair-E CO2 sensor	T8100-E-SA-1000RTD	14904
Systemair-E CO2 + RH + Temperature	T8100-E-H-SA-10R	211522
Systemair-1 CO2 duct sensor	T8041	14906
Duct sensor NTC10K (-30-70C) 1,5 m	TG-K3/NTC10-01	211524
Room sensor NTC10K (0-50C)	TG-R5/NTC10-01	211525
Presence detector	-	6995
VAV/CAV conversion kit	-	140777
Heating / Cooling		
Duct Water heating battery 2 Rows	VBC 160-2	5458
Duct Water heating battery 3 Rows	VBC 160-3	9840
Surface sensor NTC10K (-30-150C) 1,5 m	TG-A1/NTC10-01	211523
Actuator 0-10V	RVAZ4 24A	9862
2-Way-Valve	ZTV 15-0,4	9829
2-Way-Valve	ZTV 15-0,6	6571
3-Way-Valve	ZTR 15-0,4	9670
3-Way-Valve	ZTR 15-0,6	6573
El. Reheater VTC 300 R	ELH VTC 300 R	138107
El. Reheater VTC 300 L	ELH VTC 300 L	139312
Electrical Duct Heater	CB 160-1,2 230V/1	5291
Electrical Duct Heater	CB 160-2,1 230V/1	5292
Electrical Duct Heater	CB 160-2,7 200V/1	5382
Preheater KIT 230V	1-Phase kit	142852
Duct Cooler	CWK 160-3-2,5	30022
Filters		
PF VTC 300 STD kit	F7/ePM1 60% Supply M5/ePM10 50% Extract	317699
PF VTC 300 OPT kit 1	F8/ePM1 70% Supply M5/ePM10 50% Extract	317700
BF VTC 300 OPT kit 2	F7/ePM1 60% Supply M5/ePM10 50% Extract	317701
Other		
Combi grille 160, White	CVVX 160, white	25396
Combi grille 160, Black	CVVX 160, black	25394
Outdoor grille Ø160 White	-	466900
Outdoor grille Ø160 Black	-	486900
Outdoor grille Ø160 Magnelis	-	487500
Fast clamp 160	FK 160	1610
Connection duct D160/1,0 M/F	SCD Flexible Silencer	2558
Silencer	LDC 160-600	5192
Silencer	LDC 160-900	5193
Control damper	TUNE-R-160-3-M1	311939
Control damper (Spring)	TUNE-R-160-3-M4	311969
Relay mounting kit	RMK Kit Systemair	576801
Control damper	TUNE-R-160-3-M2	311949
Control damper (Spring)	TUNE-R-160-3-M5	311979
Transformer 24V	PSS20 24V	202692
Iris Damper	SPI-160 C	6753
Pressure guard with pitot tube	DPR200T	212987

Supply
Exhaust
Fresh air/supply
Extract

*** Drainage connection

SAVE VTC 500

Condensation and enthalpy model



SAVE VTC 500 (condensation) or SAVE VTC-E 500 (enthalpy) is a top connected counter flow unit designed for installation on the wall in laundry rooms, storerooms etc. in a home with a ventilated area of up to approx. 400 m^2.

VTC 500 or VTC-E 500 is white painted, double skinned, fully insulated and comes with control panel with complete control functionality. The unit automatically regulates the recovery of heating/cooling by the built in damper and has automatic defrosting function.

SAVE CONNECT internet access module is delivered as standard with all units for remote control via mobile APP.

SAVE PRO web application for own or client device remote monitoring, control and troubleshooting.

Download SAVE CONNECT app via Google Play or Apple store.

- High efficiency condensation and enthalpy heat exchanger with high performance EC fans
- Demand ventilation control is standard with the built in humidity sensor
- Automatic defrosting
- Preheater needed for outdoor temperature < -5°C/-10°C (E)
- Selection of different control panels available:
  - SAVE TOUCH for full functionality
  - SAVE LIGHT for basic functionality
- Connection board for easy access
- Modbus communication RS-485 as standard
- Built in electrical re-heater as accessory

Mid-frequency band, Hz									
LwA dB(A)	**Tot**	63	125	250	500	1k	2k	4k	8k
Supply air	**68**	74	71	70	66	61	57	51	40
Extract air	**53**	70	61	56	51	46	40	28	21
Surrounding	**44**	49	48	49	41	35	32	25	21

The sound data table indicates the sound power level LwA, which should not be confused with the sound pressure level LpA (based on the operation point - 117 l/s at 50 Pa).

Technical data SAVE VTC 500 and VTC-E 500		
Art. no. (condensation)	Right/Left	488842/488843
Art. no. (enthalpy)	Right/Left	488907/488908
Energy efficiency class		
Standard unit		A
Standard unit with accessories*		A
Voltage/Frequency	V/50 Hz	230
Power rating per fan	W	67
at example duty point:		117 l/s at 50 Pa 421 m^3/h at 50 Pa
SFP	kW/m^3/s	1,15
Efficiency according EN 13141-7		84% 81% (E)**
Fuse	A	10
Input power, fan motor	W	2x170 / 2x85 (E)**
Filter, supply air		
Pleat filter (PF)		F7/ePM1 60%
Filter, extract air		
Pleat filter (PF)		M5/ePM10 50%
Weight	kg	80

* With Indoor Air Quality accessories
** (E) - Enthalpy version

SFP = Specific Fan Power (kW/m^3/s)
The SFP value stated applies to the complete unit.

Performance data (Right unit)

Supply air

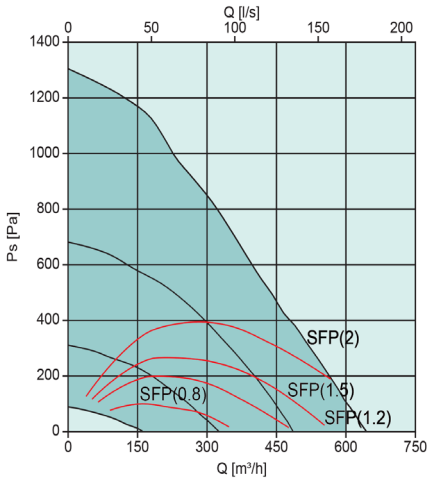

Extract air

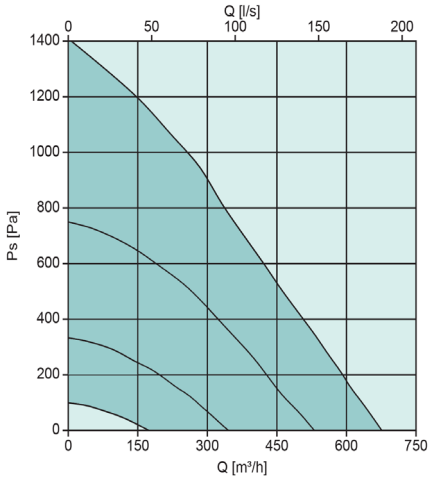

Scheme

Right-hand version

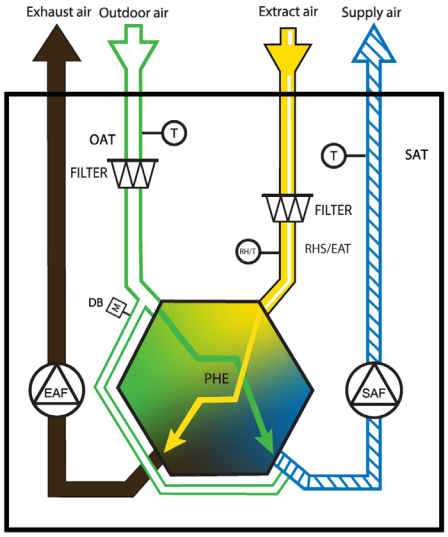

SAF	Supply fan
EAF	Extract fan
FILTER	Extract/Supply filter
OAT	Outdoor air temp. sensor
SAT	Supply air temp. sensor
RHS/EAT	Relative humidity sensor/Extract air temp. sensor
DB	Bypass damper drive
PHE	Plate Heat Exchanger

Dimensions

SAVE VTC 500 Right-hand version

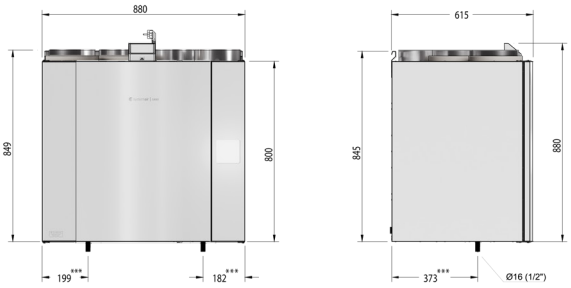

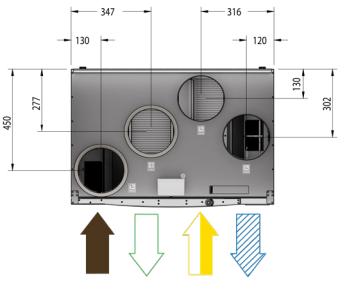

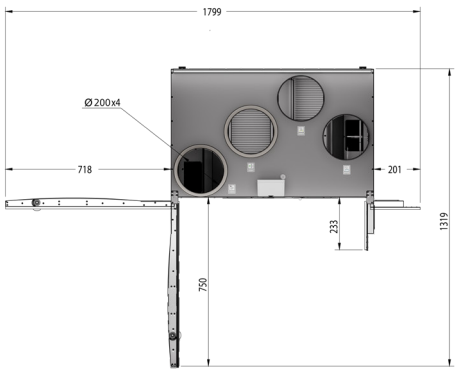

Accessories

Accessories SAVE VTC 500 and SAVE VTC-E 500		Art. no.
Controls		
SAVE TOUCH White	Touch display white	138077
SAVE TOUCH Black	Touch display black	138078
SAVE LIGHT White	SAVE Light White	319118
SAVE LIGHT Black	SAVE Light Black	319119
SAVE Wall Mounted kit	Control panel frame	140736
CEC Cable 12m	VK-12	24782
CEC Cable 6m	VK-6	24783
Diverting Plug	Diverting Plug	37367
Indoor Air Quality Wired		
Systemair-E CO2 sensor	T8100-E-SA-1000RTD	14904
Systemair-E CO2 + RH + Temperature	T8100-E-H-SA-10R	211522
Systemair-1 CO2 duct sensor	T8041	14906
Duct sensor NTC10K (-30-70C) 1,5 m	TG-K3/NTC10-01	211524
Room sensor NTC10K (0-50C)	TG-R5/NTC10-01	211525
Presence detector	-	6995
VAV/CAV conversion kit	-	140777
CAV kit	-	161100
Heating / Cooling		
Duct Water heating battery 2 Rows	VBC 200-2	5459
Duct Water heating battery 3 Rows	VBC 200-3	9841
Surface sensor NTC10K (-30-150C) 1,5 m	TG-A1/NTC10-01	211523
Actuator 0-10V	RVAZ4 24A	9862
2-Way-Valve	ZTV 15-0,6	6571
2-Way-Valve	ZTV 15-1,0	9823
3-Way-Valve	ZTR 15-0,6	6573
3-Way-Valve	ZTR 15-1,0	9672
El. Reheater VTC 500 R	ELH VTC 500 R 1,67kW	158105
El. Reheater VTC 500 L	ELH VTC 500 L 1,67kW	158109
Electrical Duct Heater	CB 200-2,1 230V/1	5384
Electrical Duct Heater	CB 200-3,0 230V/1	5370
Preheater KIT 230V	1-Phase kit	142852
Duct Cooler	CWK 200-3-2,5	30023
Filters		
PF VTC 500 STD kit	F7/ePM1 60% Supply M5/ePM10 50% Extract	161251
PF VTC 500 OPT kit	F8/ePM1 70% Supply M5/ePM10 50% Extract	161252
Other		
Combi grille 200, White	CVVX 200, white	25397
Combi grille 200, Black	CVVX 200, black	25395
Outdoor grille Ø200 White	-	478090
Outdoor grille Ø200 Black	-	487100
Outdoor grille Ø200 Magnelis	-	487600
Fast clamp 200	FK 200	1611
Connection duct D200/1,0 M/F	SCD Flexible Silencer	2560
Silencer	LDC 200-600	5194
Silencer	LDC 200-900	5195
Control damper	TUNE-R-200-3-M1	311940
Control damper (Spring)	TUNE-R-200-3-M4	311970
Relay mounting kit	RMK Kit Systemair	576801
Control damper	TUNE-R-200-3-M2	311950
Control damper (Spring)	TUNE-R-200-3-M5	311980
Transformer 24V	PSS20 24V	202692
Iris Damper	SPI-200 C	6754
Pressure guard with pitot tube	DPR200T	212987

Supply
Exhaust
Fresh air/supply
Extract

*** Drainage connection

SAVE VTC 700

Condensation and enthalpy model



SAVE VTC 700 (condensation) or SAVE VTC-E 700 (enthalpy) is a top connected high efficiency counter flow unit designed for installation on the floor in premises with a ventilated area of up to approx. 550 m².

VTC 700 or VTC-E 700 is white painted, double skinned, fully insulated and comes with control panel with complete control functionality. The unit automatically regulates the recovery of heating/cooling by the built in damper and has automatic defrosting function.

SAVE CONNECT internet access module is delivered as standard with all units for remote control via mobile APP.

SAVE PRO web application for own or client device remote monitoring, control and troubleshooting.

Download SAVE CONNECT app via Google Play or Apple store.

- High efficiency condensation and enthalpy heat exchanger with high performance EC fans
- Demand ventilation control is standard with the built in humidity sensor
- Automatic defrosting
- Preheater needed for outdoor temperature < -5°C/-10°C (E)
- Selection of different control panels available:
  - SAVE TOUCH for full functionality
  - SAVE LIGHT for basic functionality
- Connection board for easy access
- Modbus communication RS-485 as standard
- Built in electrical re-heater as accessory

Mid-frequency band, Hz									
LwA dB(A)	**Tot**	63	125	250	500	1k	2k	4k	8k
Supply air	**64**	64	57	59	55	59	59	48	40
Extract air	**48**	52	49	48	43	45	38	24	25
Surrounding	**41**	49	46	47	36	35	32	24	26

The sound data table indicates the sound power level LwA, which should not be confused with the sound pressure level LpA (based on the operation point 166 l/s at 50 Pa).

Technical data SAVE VTC 700 and VTC-E 700		
Art. no. (condensation)	Right/Left	488840/488841
Art. no. (enthalpy)	Right/Left	488913/488914
Energy efficiency class Standard unit Standard unit with accessories*		 A A+
Voltage/Frequency	V/50 Hz	230
Power rating per fan at example duty point:	W	64 166 l/s at 50 Pa 599 m³/h at 50 Pa
SFP	kW/m³/s	0,77
Efficiency according EN 13141-7		87% 79% (E)**
Fuse	A	10
Input power, fan motor	W	2 x 170
Filter, supply air		
Pleat filter (PF)		F7/ePM1 60%
Filter, extract air		
Pleat filter (PF)		M5/ePM10 50%
Weight	kg	151

* With Indoor Air Quality accessories
** (E) - Enthalpy version

SFP = Specific Fan Power (kW/m³/s)
The SFP value stated applies to the complete unit.

Performance data (Right unit)

Supply air

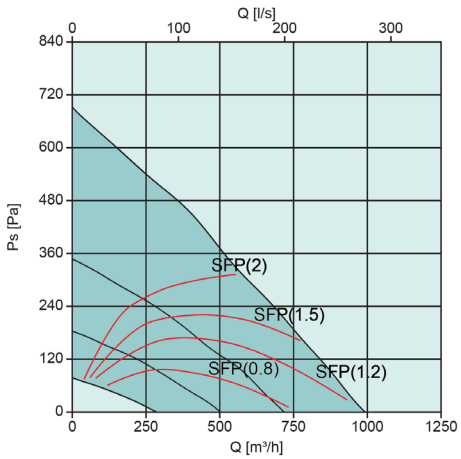

Extract air

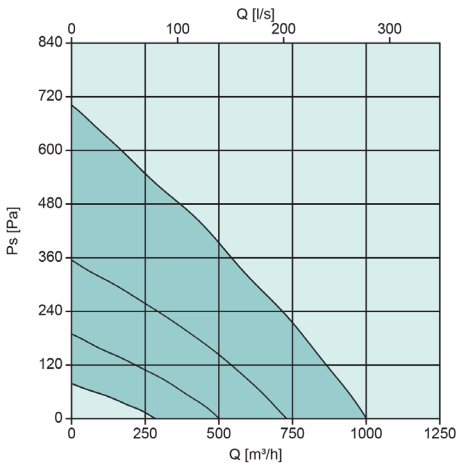

Scheme

Right-hand version

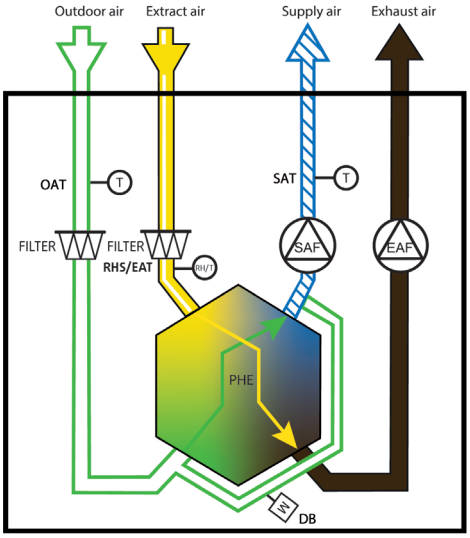

SAF	Supply fan
EAF	Extract fan
FILTER	Extract/Supply filter
OAT	Outdoor air temp. sensor
SAT	Supply air temp. sensor
RHS/EAT	Relative humidity sensor/Extract air temp. sensor
DB	Bypass damper drive
PHE	Plate Heat Exchanger

Dimensions

SAVE VTC 700 Right-hand version

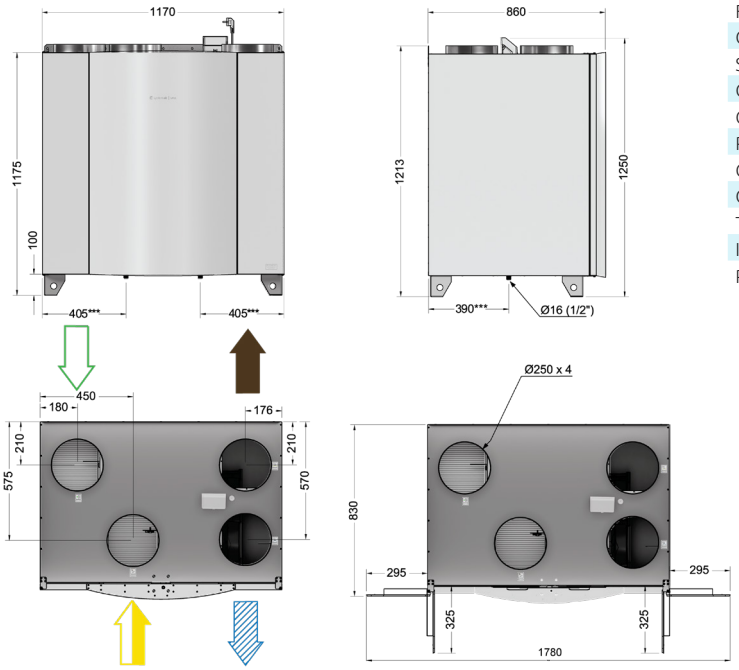



*** Drainage connection

Accessories

Accessories SAVE VTC 700 and VTC-E 700		Art. no.
Controls		
SAVE TOUCH White	Touch display white	138077
SAVE TOUCH Black	Touch display black	138078
SAVE LIGHT White	SAVE Light White	319118
SAVE LIGHT Black	SAVE Light Black	319119
SAVE Wall Mounted Kit	Control panel frame	140736
CEC Cable 12m	VK-12	24782
CEC Cable 6m	VK-6	24783
Diverting Plug	Diverting Plug	37367
Indoor Air Quality Wired		
Systemair-E CO2 sensor	T8100-E-SA-1000RTD	14904
Systemair-E CO2 + RH + Temperature	T8100-E-H-SA-10R	211522
Systemair-1 CO2 duct sensor	T8041	14906
Duct sensor NTC10K (-30-70C) 1,5 m	TG-K3/NTC10-01	211524
Room sensor NTC10K (0-50C)	TG-R5/NTC10-01	211525
Presence detector	-	6995
VAV/CAV conversion kit	-	140777
Heating / Cooling		
Duct Water heating battery 2 Rows	VBC 250-2	5460
Duct Water heating battery 3 Rows	VBC 250-3	9843
Surface sensor NTC10K (-30-150C) 1,5 m	TG-A1/NTC10-01	211523
Actuator 0-10V	RVAZ4 24A	9862
2-Way-Valve	ZTV 15-1.6	9824
3-Way-Valve	ZTR 15-1.6	9673
El. Reheater VTC 700 R	ELH VTC 700 R	138200
El. Reheater VTC 700 L	ELH VTC 700 L	137746
Electrical Duct Heater	CB 250-3,0 230V/1	5385
Electrical Duct Heater	CB 250-6,0 400V/2	5372
Electrical Duct Heater	CB 250-9,0 400V/3	5373
Preheater KIT 230V	1-Phase kit	142852
Preheater KIT 400V	2/3-Phase kit	151612
Duct Cooler	CWK 250-3-2.5	30024
Filters		
PF VTR/VTC 700 STD kit	F7/ePM1 60% Supply M5/ePM10 50% Extract	145849
PF VTR/VTC 700 OPT kit 1	F8/ePM1 70% Supply M5/ePM10 50% Extract	145924
BF VTC 700 OPT kit 2	F7/ePM1 60% Supply M5/ePM10 50% Extract	317703
Other		
Combi grille 250, White	CVVX 250, white	146260
Combi grille 250, Black	CVVX 250, black	8498
Outdoor grille Ø250 White	-	476250
Outdoor grille Ø250 Black	-	487200
Outdoor grille Ø250 Magnelis	-	487700
Fast clamp 250	FK 250	1612
Connection duct D250/1,0 M/F	SCD Flexible Silencer	2561
Silencer	LDC 250-900	5196
Control damper	TUNE-R-250-3-M1	311941
Control damper (Spring)	TUNE-R-250-3-M4	311971
Relay mounting kit	RMK Kit Systemair	576801
Control damper	TUNE-R-250-3-M2	311951
Control damper (Spring)	TUNE-R-250-3-M5	311981
Transformer 24V	PSS20 24V	202692
Iris Damper	SPI-250 C	6755
Pressure guard with pitot tube	DPR200T	212987

SAVE VSC 100

Condensation and enthalpy model



SAVE VSC 100 (condensation) or SAVE VSC-E 100 (enthalpy) is a side connected counter flow unit designed for installation in the ceiling in a home with a ventilated area of up to approx. 100 m².

VSC 100 or VSC-E 100 is galvanized, double skinned, fully insulated and comes with complete control functionality. The unit automatically regulates the recovery of heating/cooling by the built in damper and has automatic defrosting function.

SAVE CONNECT internet access module is delivered as standard with all units for remote control via mobile APP.

SAVE PRO web application for own or client device remote monitoring, control and troubleshooting.

Download SAVE CONNECT app via Google Play or Apple store.

- High efficiency condensation and enthalpy heat exchanger with high performance EC fans
- Demand ventilation control is standard with the built in humidity sensor
- Automatic defrosting
- Preheater needed for outdoor temperature < -3°C/-10°C (E)
- Selection of different control panels available:
  - SAVE TOUCH for full functionality
  - SAVE LIGHT for basic functionality
- Connection board for easy access
- Modbus communication RS-485 as standard

Technical data SAVE VSC 100 and SAVE VSC-E 100			
Art. no. (condensation)		488806	
Art. no. (enthalpy)		488900	
Energy efficiency class			
Standard unit		A	
Standard unit with accessories*		A+	
Voltage/Frequency	V/50Hz	230	
Power rating per fan	W	12	
at example duty point:		32 l/s at 50 Pa	
		116 m³/h at 50 Pa	
SFP	kW/m³/s	0,74	
Efficiency according EN 13141-7		86%	85% (E)**
Fuse	A	10	
Input power, fan motor	W	2 x 27	
Filter, supply air			
Pleat filter (PF)		F7/ePM1 60%	
Filter, extract air			
Pleat filter (PF)		M5/ePM10 50%	
Weight	kg	47	48 (E)**

* With Indoor Air Quality accessories
** (E) - Enthalpy version

SFP = Specific Fan Power (kW/m³/s)
The SFP value stated applies to the complete unit.

Mid-frequency band, Hz									
LwA dB(A)	**Tot**	63	125	250	500	1k	2k	4k	8k
Supply air	**61**	71	64	62	59	55	49	44	28
Extract air	**47**	66	46	53	43	22	14	16	19
Surrounding	**36**	43	42	42	33	21	16	17	21

The sound data table indicates the sound power level LwA, which should not be confused with the sound pressure level LpA (based on the operation point - 32 l/s at 50 Pa).

Performance data (Right unit)

Supply air

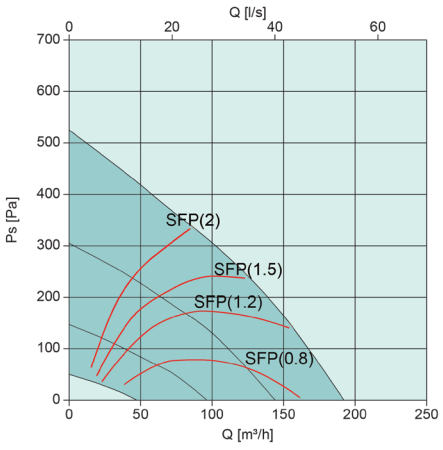

Extract air

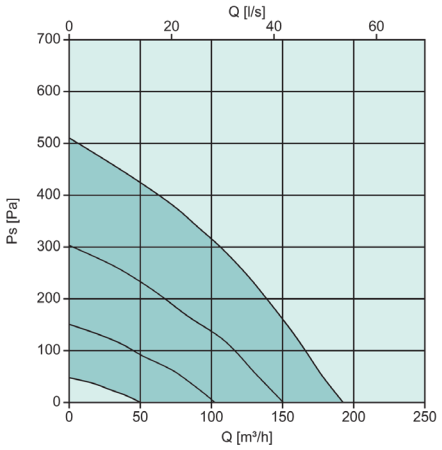

Scheme

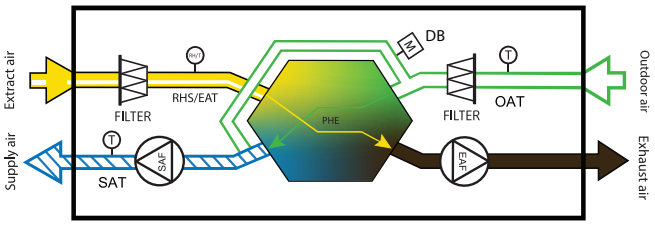

SAF	Supply fan
EAF	Extract fan
FILTER	Extract/Supply filter
OAT	Outdoor air temp. sensor
SAT	Supply air temp. sensor
RHS/EAT	Relative humidity sensor/Extract air temp. sensor
DB	Bypass damper drive
PHE	Plate Heat Exchanger

Dimensions

SAVE VSC 100

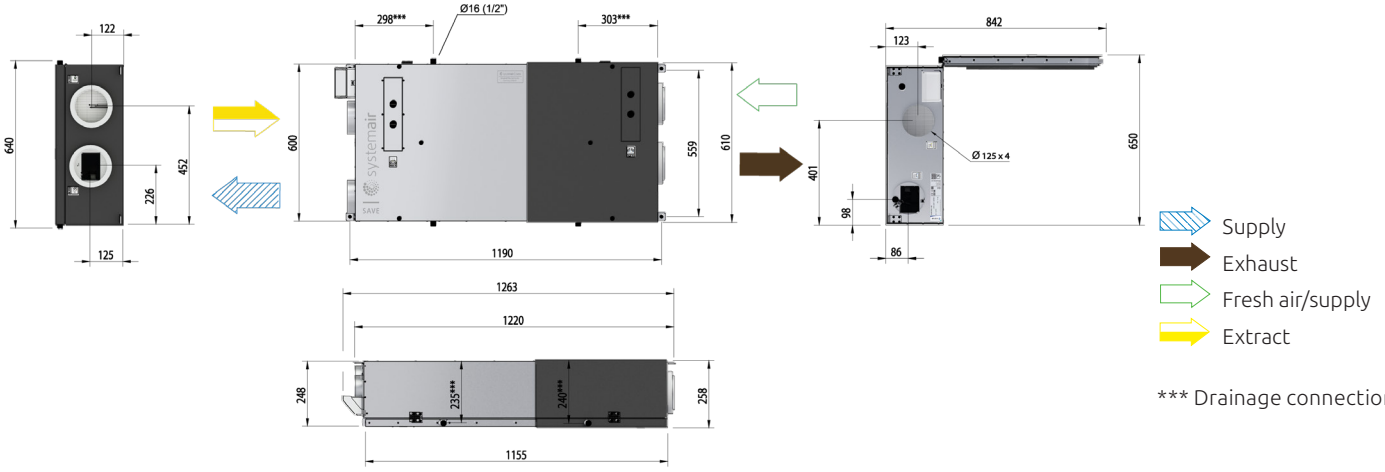

*** Drainage connection

Accessories

Accessories SAVE VSC 100 and SAVE VSC-E 100		Art. no.
Controls		
SAVE TOUCH White	Touch display white	138077
SAVE TOUCH Black	Touch display black	138078
SAVE LIGHT White	SAVE Light White	319118
SAVE LIGHT Black	SAVE Light Black	319119
SAVE Wall Mounted Kit	Control panel frame	140736
CEC Cable 12m	VK-12	24782
CEC Cable 6m	VK-6	24783
Diverting Plug	Diverting Plug	37367
Indoor Air Quality Wired		
Systemair-E CO2 sensor	T8100-E-SA-1000RTD	14904
Systemair-E CO2 + RH + Temperature	T8100-E-H-SA-10R	211522
Systemair-1 CO2 duct sensor	T8041	14906
Duct sensor NTC10K (-30-70C) 1,5 m	TG-K3/NTC10-01	211524
Room sensor NTC10K (0-50C)	TG-R5/NTC10-01	211525
Presence detector	-	6995
VAV/CAV conversion kit	-	140777
Heating / Cooling		
Duct Water heating battery 2 Rows	VBC 125-2	5457
Duct Water heating battery 3 Rows	VBC 125-3	9839
Surface sensor NTC10K(-30-150C)1,5 m	TG-A1/NTC10-01	211523
Actuator 0-10V	RVAZ4 24A	9862
2-Way-Valve	ZTV 15-0,4	9829
2-Way-Valve	ZTV 15-0,6	6571
3-Way-Valve	ZTR 15-0,4	9670
3-Way-Valve	ZTR 15-0,6	6573
Electrical Duct Heater	CB 125-0,6 230V/1	5289
Electrical Duct Heater	CB 125-1,2 230V/1	5290
Electrical Duct Heater	CB 125-1,8 230V/1	5377
Preheater KIT 230V	1-Phase kit	142852
Duct Cooler	CWK 125-3-2,5	30021
Filters		
PF VSC 100 STD kit	F7/ePM1 60% Supply M5/ePM10 50% Extract	239523
PF VSC 100 OPT kit	F8/ePM1 70% Supply M5/ePM10 50% Extract	239524
Other		
Combi grille 125, White	CVVX 125, white	26422
Combi grille 125, Black	CVVX 125, black	26421
Outdoor grille Ø125 White	-	477990
Outdoor grille Ø125 Black	-	486800
Outdoor grille Ø125 Magnelis	-	487400
Fast clamp 125	FK 125	1608
Connection duct D125/1,0 M/F	SCD Flexible Silencer	2556
Silencer	LDC 125-600	5190
Silencer	LDC 125-900	5191
Control damper	TUNE-R-125-3-M1	311938
Control damper (Spring)	TUNE-R-125-3-M4	311968
Relay mounting kit	RMK Kit Systemair	576801
Control damper	TUNE-R-125-3-M2	311948
Control damper (Spring)	TUNE-R-125-3-M5	311978
Transformer 24V	PSS20 24V	202692
Iris Damper	SPI-125 C	6751
Pressure guard with pitot tube	DPR200T	212987

SAVE VSC 200

Condensation and enthalpy model



SAVE VSC 200 (condensation) or SAVE VSC-E 200 (enthalpy) is a side connected counter flow unit designed for installation in the ceiling in a home with a ventilated area of up to approx. 200 m².

VSC 200 or VSC-E 200 is galvanized, double skinned, fully insulated and comes with complete control functionality. The unit automatically regulates the recovery of heating/cooling by the built in damper and has automatic defrosting function.

SAVE CONNECT internet access module is delivered as standard with all units for remote control via mobile APP.

SAVE PRO web application for own or client device remote monitoring, control and troubleshooting.

Download SAVE CONNECT app via Google Play or Apple store.

- High efficiency condensation and enthalpy heat exchanger with high performance EC fans
- Demand ventilation control is standard with the built in humidity sensor
- Automatic defrosting
- Preheater needed for outdoor temperature < -3°C/-10°C (E)
- Selection of different control panels available:
  - SAVE TOUCH for full functionality
  - SAVE LIGHT for basic functionality
- Connection board for easy access
- Modbus communication RS-485 as standard

Technical data SAVE VSC 200 and SAVE VSC-E 200		
Art. no. (condensation)		488807
Art. no. (enthalpy)		488901
Energy efficiency class		
Standard unit		A
Standard unit with accessories*		A
Voltage/Frequency	V/50Hz	230
Power rating per fan	W	37
at example duty point:		65 l/s at 50 Pa
		233 m³/h at 50 Pa
SFP	kW/m³/s	1,15
Efficiency according EN 13141-7		89% 83% (E)**
Fuse	A	10
Input power, fan motor	W	2x81
Filter, supply air		
Pleat filter (PF)		F7/ePM1 60%
Filter, extract air		
Pleat filter (PF)		M5/ePM10 50%
Weight	kg	70

* With Indoor Air Quality accessories
** (E) - Enthalpy version

SFP = Specific Fan Power (kW/m³/s)
The SFP value stated applies to the complete unit.

Mid-frequency band, Hz									
LwA dB(A)	**Tot**	63	125	250	500	1k	2k	4k	8k
Supply air	**62**	74	66	65	60	54	52	44	33
Extract air	**56**	74	52	63	44	27	21	18	24
Surrounding	**45**	50	41	52	37	24	19	19	24

The sound data table indicates the sound power level LwA, which should not be confused with the sound pressure level LpA (based on the operation point - 65 l/s at 50 Pa).

Performance data (Right unit)

Supply air

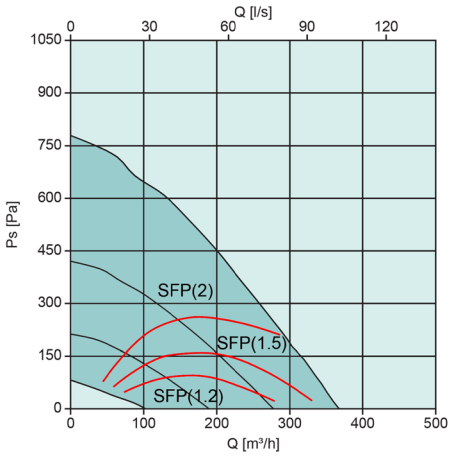

Extract air

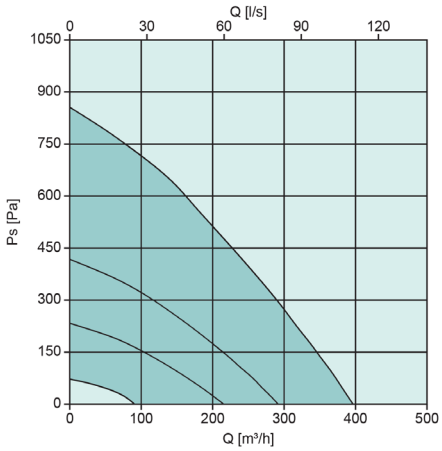

Scheme

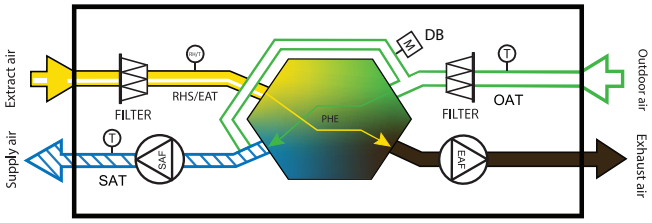

SAF	Supply fan
EAF	Extract fan
FILTER	Extract/Supply filter
OAT	Outdoor air temp. sensor
SAT	Supply air temp. sensor
RHS/EAT	Relative humidity sensor/Extract air temp. sensor
DB	Bypass damper drive
PHE	Plate Heat Exchanger

Dimensions

SAVE VSC 200

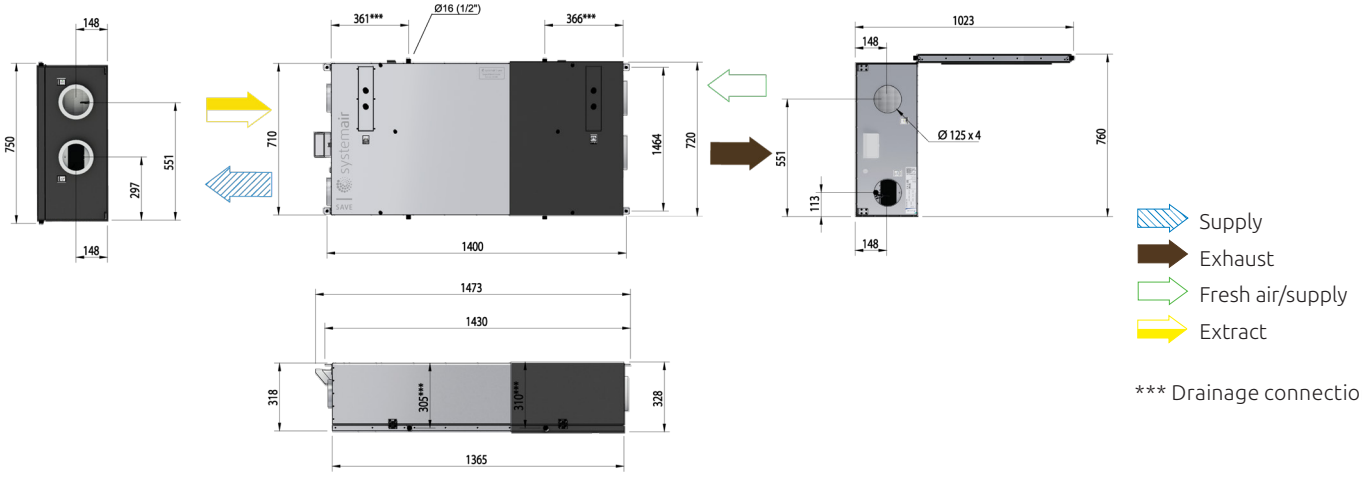

*** Drainage connection

Accessories

Accessories SAVE VSC 200 and VSC-E 200		Art. no.
Controls		
SAVE TOUCH White	Touch display white	138077
SAVE TOUCH Black	Touch display black	138078
SAVE LIGHT White	SAVE Light White	319118
SAVE LIGHT Black	SAVE Light Black	319119
SAVE Wall Mounted Kit	Control panel frame	140736
CEC Cable 12m	VK-12	24782
CEC Cable 6m	VK-6	24783
Diverting Plug	Diverting Plug	37367
Indoor Air Quality Wired		
Systemair-E CO2 sensor	T8100-E-SA-1000RTD	14904
Systemair-E CO2 + RH + Temperature	T8100-E-H-SA-10R	211522
Systemair-1 CO2 duct sensor	T8041	14906
Duct sensor NTC10K (-30-70C) 1,5 m	TG-K3/NTC10-01	211524
Room sensor NTC10K (0-50C)	TG-R5/NTC10-01	211525
Presence detector	-	6995
VAV/CAV conversion kit	-	140777
Heating / Cooling		
Duct Water heating battery 2 Rows	VBC 125-2	5457
Duct Water heating battery 3 Rows	VBC 125-3	9839
Surface sensor NTC10K(-30-150C)1,5 m	TG-A1/NTC10-01	211523
Actuator 0-10V	RVAZ4 24A	9862
2-Way-Valve	ZTV 15-0,4	9829
2-Way-Valve	ZTV 15-0,6	6571
3-Way-Valve	ZTR 15-0,4	9670
3-Way-Valve	ZTR 15-0,6	6573
Electrical Duct Heater	CB 125-0,6 230V/1	5289
Electrical Duct Heater	CB 125-1,2 230V/1	5290
Electrical Duct Heater	CB 125-1,8 230V/1	5377
Preheater KIT 230V	1-Phase kit	142852
Duct Cooler	CWK 125-3-2,5	30021
Filters		
PF VSC 200 STD kit	F7/ePM1 60% Supply M5/ePM10 50% Extract	251905
PF VSC 200 OPT kit	F8/ePM1 70% Supply M5/ePM10 50% Extract	251906
Other		
Combi grille 125, White	CVVX 125, white	26422
Combi grille 125, Black	CVVX 125, black	26421
Outdoor grille Ø125 White	-	477990
Outdoor grille Ø125 Black	-	486800
Outdoor grille Ø125 Magnelis	-	487400
Fast clamp 125	FK 125	1608
Connection duct D125/1,0 M/F	SCD Flexible Silencer	2556
Silencer	LDC 125-600	5190
Silencer	LDC 125-900	5191
Control damper	TUNE-R-125-3-M1	311938
Control damper (Spring)	TUNE-R-125-3-M4	311968
Relay mounting kit	RMK Kit Systemair	576801
Control damper	TUNE-R-125-3-M2	311948
Control damper (Spring)	TUNE-R-125-3-M5	311978
Transformer 24V	PSS20 24V	202692
Iris Damper	SPI-125 C	6751
Pressure guard with pitot tube	DPR200T	212987

SAVE VSC 300

Condensation and enthalpy model



SAVE VSC 300 (condensation) or SAVE VSC-E 300 (enthalpy) is a side connected counter flow unit designed for installation in the ceiling in a home with a ventilated area of up to approx. 320 m².

VSC 300 or VSC-E 300 is galvanized, double skinned, fully insulatedand comes with complete control functionality. The unit automatically regulates the recovery of heating/ cooling by the built in damper and has automatic defrosting function.

SAVE CONNECT internet access module is delivered as standard with all units for remote control via mobile APP.

SAVE PRO web application for own or client device remote monitoring, control and troubleshooting.

Download SAVE CONNECT app via Google Play or Apple store.

- High efficiency condensation and enthalpy heat exchanger with high performance EC fans
- Demand ventilation control is standard with the built in humidity sensor
- Automatic defrosting
- Preheater needed for outdoor temperature < -3°C/-10°C (E)
- Selection of different control panels available:
  - SAVE TOUCH for full functionality
  - SAVE LIGHT for basic functionality
- Connection board for easy access
- Modbus communication RS-485 as standard

Mid-frequency band, Hz									
LwA dB(A)	**Tot**	63	125	250	500	1k	2k	4k	8k
Supply air	**70**	76	72	76	65	59	59	52	40
Extract air	**46**	71	50	51	40	30	28	20	24
Surrounding	**46**	52	49	53	36	26	25	21	24

The sound data table indicates the sound power level LwA, which should not be confused with the sound pressure level LpA (based on the operation point - 99 l/s at 50 Pa).

Technical data SAVE VSC 300 and VSC-E 300		
Art. no. (condensation)		488808
Art. no. (enthalpy)		488902
Energy efficiency class		
Standard unit		A
Standard unit with accessories*		A
Voltage/Frequency	V/50Hz	230
Power rating per fan at example duty point:	W	52 99 l/s at 50 Pa 358 m³/h at 50 Pa
SFP	kW/m³/s	1,04
Efficiency according EN 13141-7		85% 79% (E)**
Fuse	A	10
Input power, fan motor	W	2 x 115
Filter, supply air		
Pleat filter (PF)		F7/ePM1 60%
Filter, extract air		
Pleat filter (PF)		M5/ePM10 50%
Weight	kg	80 81 (E)**

* With Indoor Air Quality accessories
** (E) - Enthalpy version

SFP = Specific Fan Power (kW/m³/s)
The SFP value stated applies to the complete unit.

Performance data (Right unit)

Supply air

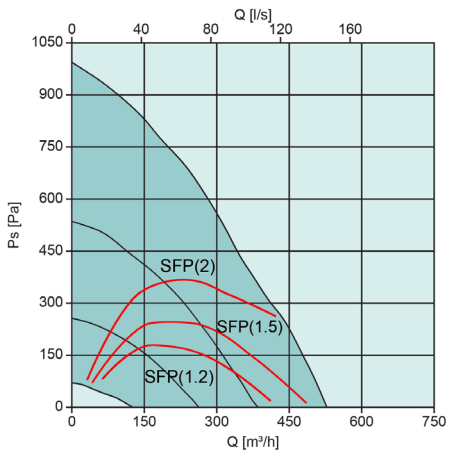

Extract air

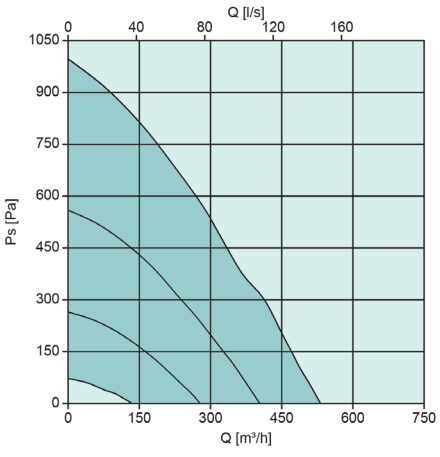

Scheme

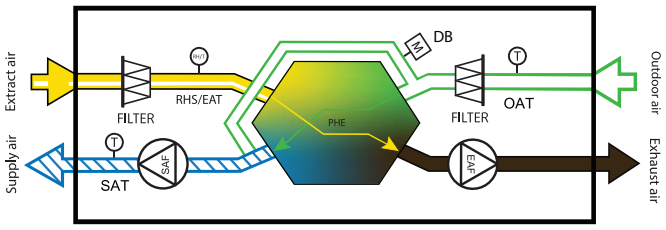

SAF	Supply fan
EAF	Extract fan
FILTER	Extract/Supply filter
OAT	Outdoor air temp. sensor
SAT	Supply air temp. sensor
RHS/EAT	Relative humidity sensor/Extract air temp. sensor
DB	Bypass damper drive
PHE	Plate Heat Exchanger

Dimensions

SAVE VSC 300

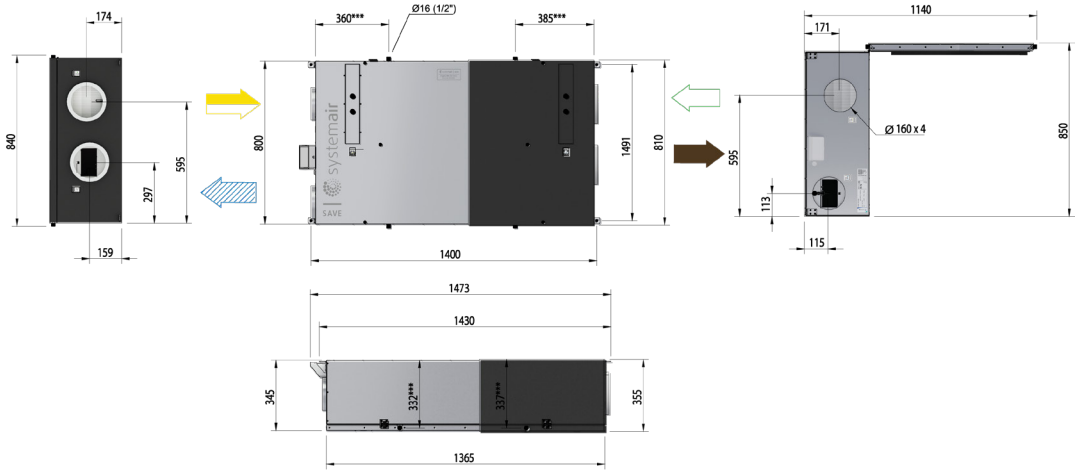

Supply
Exhaust
Fresh air/supply
Extract

*** Drainage connection

Accessories

Accessories SAVE VSC 300 and VSC-E 300		Art. no.
Controls		
SAVE TOUCH White	Touch display white	138077
SAVE TOUCH Black	Touch display black	138078
SAVE LIGHT White	SAVE Light White	319118
SAVE LIGHT Black	SAVE Light Black	319119
SAVE Wall Mounted Kit	Control panel frame	140736
CEC Cable 12m	VK-12	24782
CEC Cable 6m	VK-6	24783
Diverting Plug	Diverting Plug	37367
Indoor Air Quality Wired		
Systemair-E CO2 sensor	T8100-E-SA-1000RTD	14904
Systemair-E CO2 + RH + Temperature	T8100-E-H-SA-10R	211522
Systemair-1 CO2 duct sensor	T8041	14906
Duct sensor NTC10K (-30-70C) 1,5 m	TG-K3/NTC10-01	211524
Room sensor NTC10K (0-50C)	TG-R5/NTC10-01	211525
Presence detector	-	6995
VAV/CAV conversion kit	-	140777
Heating / Cooling		
Duct Water heating battery 2 Rows	VBC 160-2	5458
Duct Water heating battery 3 Rows	VBC 160-3	9840
Surface sensor NTC10K(-30-150C)1,5 m	TG-A1/NTC10-01	211523
Actuator 0-10V	RVAZ4 24A	9862
2-Way-Valve	ZTV 15-0,4	9829
2-Way-Valve	ZTV 15-0,6	6571
3-Way-Valve	ZTR 15-0,4	9670
3-Way-Valve	ZTR 15-0,6	6573
Electrical Duct Heater	CB 160-1,2 230V/1	5291
Electrical Duct Heater	CB 160-2,1 230V/1	5292
Electrical Duct Heater	CB 160-2,7 230V/1	5382
Preheater KIT 230V	1-Phase kit	142852
Duct Cooler	CWK 160-3-2,5	30022
Filters		
PF VSC 300 STD kit	F7/ePM1 60% Supply M5/ePM10 50% Extract	251909
PF VSC 300 OPT kit	F8/ePM1 70% Supply M5/ePM10 50% Extract	251910
Other		
Combi grille 160, White	CVVX 160, white	25396
Combi grille 160, Black	CVVX 160, black	25394
Outdoor grille Ø160 White	-	466900
Outdoor grille Ø160 Black	-	486900
Outdoor grille Ø160 Magnelis	-	487500
Fast clamp 160	FK 160	1610
Connection duct D160/1,0 M/F	SCD Flexible Silencer	2558
Silencer	LDC 160-600	5192
Silencer	LDC 160-900	5193
Control damper	TUNE-R-160-3-M1	311939
Control damper (Spring)	TUNE-R-160-3-M4	311969
Relay mounting kit	RKM Kit Systemair	576801
Control damper	TUNE-R-160-3-M2	311949
Control damper (Spring)	TUNE-R-160-3-M5	311979
Transformer 24V	PSS20 24V	202692
Iris Damper	SPI-160 C	6753
Pressure guard with pitot tube	DPR200T	212987

SAVE VTR 100/B



SAVE VTR 100/B is a top connected unit designed for a hidden installation in kitchen above the hob inside the cupboard as well as horizontal position under the false ceiling. Since the unit can be accessed from both sides, the standard unit is used for both right and left hand installation. The unit can be connected to a range of cooker hoods and comes with a high efficiency step less rotary heat exchanger adapted for ventilation of smaller houses and apartments with a ventilated area up to 100 m².

VTR 100/B is galvanized double skinned, fully insulated and comes with complete control functionality. The unit accurately controls the speed of the heat exchanger after the need of heat/cooling recovery using the step less rotor motor.

SAVE CONNECT internet access module is delivered as standard with all units for remote control via mobile APP. SAVE PRO web application for own or client device remote monitoring, control and troubleshooting.

Download SAVE CONNECT app via Google Play or Apple store.

- High efficiency rotating heat exchanger with variable speed drive and high performance EC fans
- Designed to be hidden inside the cupboard and connected to a wide range of cooker hoods
- Demand ventilation control is standard with the built in humidity sensor
- Built in electrical re-heater as accessory
- Selection of different control panels available:
  - SAVE TOUCH for full functionality
  - SAVE LIGHT for basic functionality
- Connection board for easy access
- Modbus communication RS-485 as standard

Technical data SAVE VTR 100/B		
Art. no.		488809
Energy efficiency class		
Standard unit		A
Standard unit with accessories*		A
Voltage/Frequency	V/50 Hz	230
Power rating per fan	W	18
at example duty point:		29 l/s at 50 Pa
		106 m³/h at 50 Pa
SFP	kW/m³/s	1,28
Efficiency according EN 13141-7		85%
Fuse	A	10
Electrical re-heater power	W	250
Input power, fan motor	W	2 x 35
Filter, supply air		
Pleat filter (PF)		F7/ePM1 60%
Filter, extract air		
Pleat filter (PF)		M5/ePM10 50%
Weight	kg	39

* With Indoor Air Quality accessories

SFP = Specific Fan Power (kW/m³/s)
The SFP value stated applies to the complete unit.

Mid-frequency band, Hz									
LwA dB(A)	**Tot**	63	125	250	500	1k	2k	4k	8k
Supply	**64**	77	70	63	64	60	50	46	32
Extract	**58**	71	65	60	60	45	29	19	20
Surrounding	**42**	50	42	41	44	32	23	16	13

The sound data table indicates the sound power level LwA, which should not be confused with the sound pressure level LpA (based on the operation point - 29 l/s at 50 Pa).

Performance data

Supply air

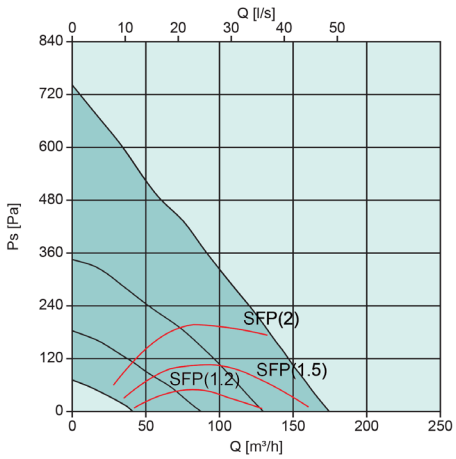

Extract air

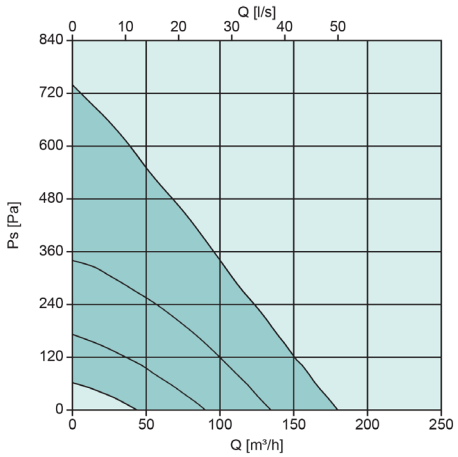

Scheme

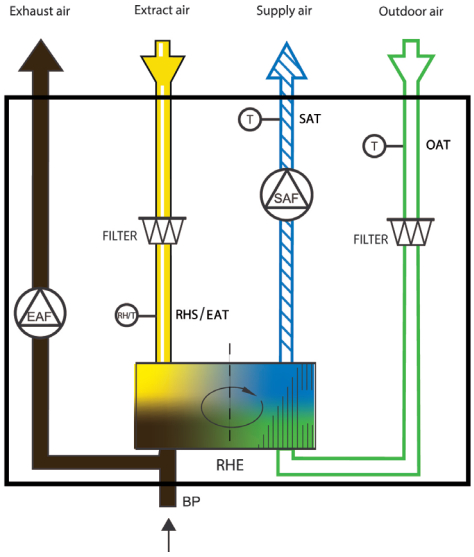

SAF	Supply fan
EAF	Extract fan
FILTER	Extract/Supply filter
OAT	Outdoor air temp. sensor
SAT	Supply air temp. sensor
RHS/EAT	Relative humidity sensor/Extract air temp. sensor
BP	Bypass cooker hood
RHE	Rotating Heat Exchanger

Dimensions

SAVE VTR 100/B Right-hand version

* Cooker hood connection

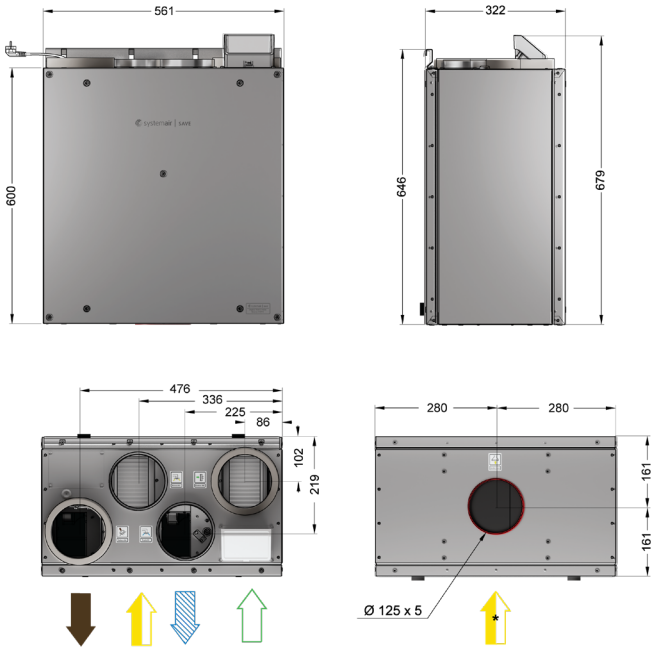

Accessories

Accessories SAVE VTR 100/B		Art. no.
Controls		
SAVE TOUCH White	Touch display white	138077
SAVE TOUCH Black	Touch display black	138078
SAVE LIGHT White	SAVE Light White	319118
SAVE LIGHT Black	SAVE Light Black	319119
SAVE Wall Mounted Kit	Control panel frame	140736
CEC Cable 12m	VK-12	24782
CEC Cable 6m	VK-6	24783
Diverting Plug	Diverting Plug	37367
Indoor Air Quality Wired		
Systemair-E CO2 sensor	T8100-E-SA-1000RTD	14904
Systemair-E CO2 + RH + Temperature	T8100-E-H-SA-10R	211522
Systemair-1 CO2 duct sensor	T8041	14906
Duct sensor NTC10K (-30-70C) 1,5 m	TG-K3/NTC10-01	211524
Room sensor NTC10K (0-50C)	TG-R5/NTC10-01	211525
Presence detector	-	6995
VAV/CAV conversion kit	-	140777
Heating / Cooling		
Duct Water heating battery 2 Rows	VBC 125-2	5457
Duct Water heating battery 3 Rows	VBC 125-3	9839
Surface sensor NTC10K (-30-150C) 1,5 m	TG-A1/NTC10-01	211523
Actuator 0-10V	RVAZ4 24A	9862
2-Way-Valve	ZTV 15-0,4	9829
2-Way-Valve	ZTV 15-0,6	6571
3-Way-Valve	ZTR 15-0,4	9670
3-Way-Valve	ZTR 15-0,6	6573
El. Reheater VTR 100/B	ELH VTC 100/B 0,25kW	154100
Electrical Duct Heater	CB 125-0,6 230V/1	5289
Electrical Duct Heater	CB 125-1,2 230V/1	5290
Electrical Duct Heater	CB 125-1,8 230V/1	5377
Preheater KIT 230V	1-Phase kit	142852
Duct Cooler	CWK 125-3-2,5	30021
Filters		
PF VTR 100 STD kit	F7/ePM1 60% Supply M5/ePM10 50% Extract	153715
PF VTR 100 OPT kit 1	F8/ePM1 70% Supply M5/ePM10 50% Extract	153716
BF VTR 100 OPT kit 2	F7/ePM1 60% Supply M5/ePM10 60% Extract	153717
Other		
Combi grille 125, White	CVVX 125, white	26422
Combi grille 125, Black	CVVX 125, black	26421
Outdoor grille Ø125 White	-	477990
Outdoor grille Ø125 Black	-	486800
Outdoor grille Ø125 Magnelis	-	487400
Fast clamp 125	FK 125	1608
Connection duct D125/1,0 M/F	SCD Flexible Silencer	2556
Silencer	LDC 125-600	5190
Silencer	LDC 125-900	5191
Control damper	TUNE-R-125-3-M1	311938
Control damper (Spring)	TUNE-R-125-3-M4	311968
Relay mounting kit	RMK Kit Systemair	576801
Control damper	TUNE-R-125-3-M2	311948
Control damper (Spring)	TUNE-R-125-3-M5	311978
Transformer 24V	PSS20 24V	202692
Iris Damper	SPI-125 C	6751
Pressure guard with pitot tube	DPR200T	212987
Duct cover, White	Duct cover W VTR 100/B	153760
Ceiling mounting kit VTR 100/B	-	155980
Cookerhood, White	MONOLIT - B White	326800
Cookerhood, Stainless	MONOLIT - B S.Steel	326801
Cookerhood, White	392-10/B Slimline White	77265
Front Cover, White	VTR 100+MONOLIT - B White	318974
Front Cover, Stainless	VTR 100+MONOLIT - B S.Steel	318975
Front Cover, White	VTR 100+Slimline White	317604
Front Cover, Stainless	VTR 100+Slimline S.Steel	317606

Supply
Exhaust
Fresh air/supply
Extract

SAVE VTR 150/B



SAVE VTR 150/B is a top connected unit designed for a hidden installation in the kitchen above the hob between the cupboards. The unit can be connected to a range of cooker hoods and comes with a high efficiency step less rotary heat exchanger adapted for ventilation of smaller houses and apartments with a ventilated area up to 115 m².

VTR 150/B is galvanized double skinned, fully insulated and comes with complete control functionality. The unit accurately controls the speed of the heat exchanger after the need of heat/ cooling recovery using the step less rotor motor. Energy efficiency class A is available together with external demand control accessory.

SAVE CONNECT internet access module is delivered as standard with all units for remote control via mobile APP.

SAVE PRO web application for own or client device remote monitoring, control and troubleshooting.

Download SAVE CONNECT app via Google Play or Apple store.

- High efficiency rotating heat exchanger with variable speed drive and high performance EC fans
- Designed to be hidden between the cupboards and connected to a wide range of cooker hoods
- Demand ventilation control is standard with the built in humidity sensor
- Built in electrical re-heater
- Selection of different control panels available:
  - SAVE TOUCH for full functionality
  - SAVE LIGHT for basic functionality
- Connection board for easy access
- Modbus communication RS-485 as standard

Mid-frequency band, Hz (SAVE VTR 150/B R)									
LwA dB(A)	**Tot**	63	125	250	500	1k	2k	4k	8k
Supply	**68**	79	73	70	65	60	58	52	50
Extract	**60**	70	63	67	53	43	34	22	21
Surrounding	**43**	51	45	50	39	31	28	22	24

Mid-frequency band, Hz (SAVE VTR 150/B L)									
LwA dB(A)	**Tot**	63	125	250	500	1k	2k	4k	8k
Supply	**66**	76	69	68	65	59	55	49	43
Extract	**58**	71	62	66	53	42	31	21	21
Surrounding	**41**	56	43	48	36	29	27	21	20

The sound data table indicates the sound power level LwA, which should not be confused with the sound pressure level LpA (based on the operation point - 54 l/s at 50 Pa).

Technical data SAVE VTR 150/B		Right	Left
Art. no. 500 W		488820	488821
Art. no. 1000 W		488818	488819
Energy efficiency class			
Standard unit		A	A
Standard unit with accessories*		A	A
Voltage/Frequency	V/50 Hz	230	230
Power rating per fan	W	35	35
at example duty point:		50 l/s	54 l/s
		at 50 Pa	at 50 Pa
		181 m³/h	195 m³/h
		at 50 Pa	at 50 Pa
SFP	kW/m³/s	1,45	1,25
Efficiency according EN 13141-7		79%	79%
Fuse	A	10	10
Electrical heating battery	W	500/1000	500/1000
Electrical re-heater power	W	2 x 83	2 x 83
Filter, supply air			
Pleat filter (PF)		F7/ePM1 60%	
Filter, extract air			
Pleat filter (PF)		M5/ePM10 50%	
Weight	kg	46	46

* With Indoor Air Quality accessories

SFP = Specific Fan Power (kW/m³/s)
The SFP value stated applies to the complete unit.

Performance data (Right unit)

Supply air

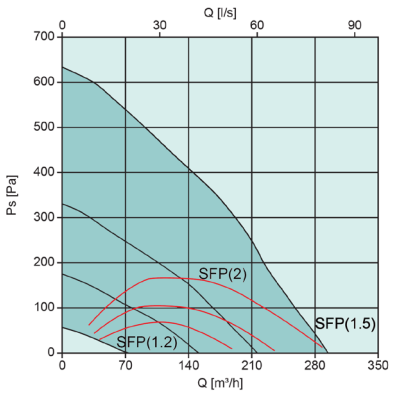

Extract air

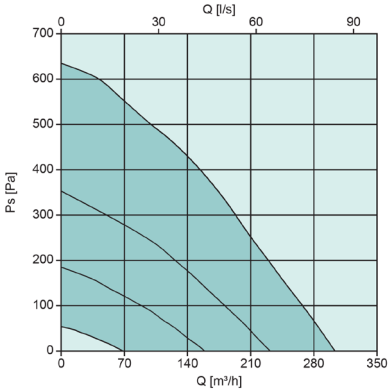

Scheme

Right-hand version

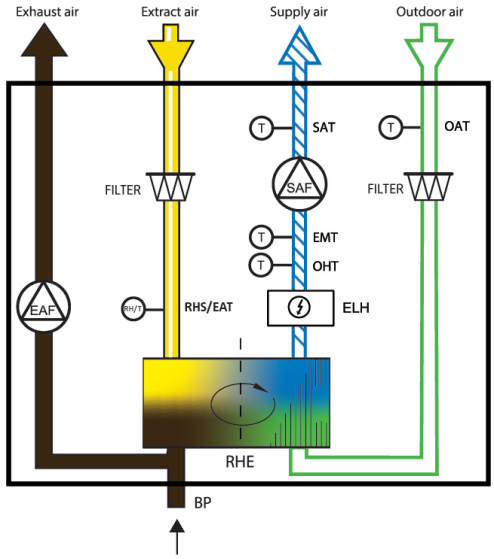

SAF	Supply fan
EAF	Extract fan
FILTER	Extract/Supply filter
OAT	Outdoor air temp. sensor
SAT	Supply air temp. sensor
RHS/EAT	Relative humidity sensor/Extract air temp. sensor
ELH	Electric heater
OHT	Overheating thermostat
EMT	Emergency thermostat
BP	Bypass cooker hood
RHE	Rotating Heat Exchanger

Dimensions

SAVE VTR 150/B Right-hand version

* Cooker hood connection

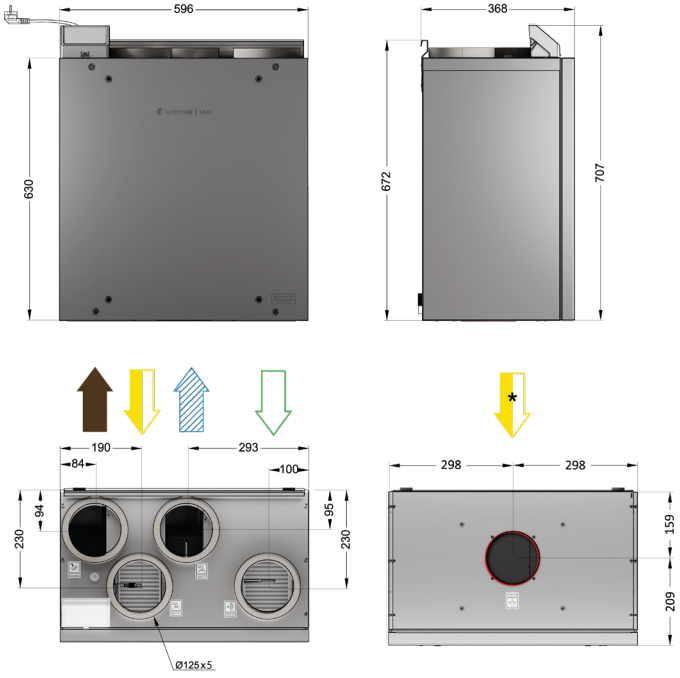

Accessories

Accessories SAVE VTR 150/B		Art. no.
Controls		
SAVE TOUCH White	Touch display white	138077
SAVE TOUCH Black	Touch display black	138078
SAVE LIGHT White	SAVE Light White	319118
SAVE LIGHT Black	SAVE Light Black	319119
SAVE Wall Mounted Kit	Control panel frame	140736
CEC Cable 12m	VK-12	24782
CEC Cable 6m	VK-6	24783
Diverting Plug	Diverting Plug	37367
Indoor Air Quality Wired		
Systemair-E CO2 sensor	T8100-E-SA-1000RTD	14904
Systemair-E CO2 + RH + Temperature	T8100-E-H-SA-10R	211522
Systemair-1 CO2 duct sensor	T8041	14906
Duct sensor NTC10K (-30-70C) 1,5 m	TG-K3/NTC10-01	211524
Room sensor NTC10K (0-50C)	TG-R5/NTC10-01	211525
Presence detector	-	6995
VAV/CAV conversion kit	-	140777
Heating / Cooling		
Duct Water heating battery 2 Rows	VBC 125-2	5457
Duct Water heating battery 3 Rows	VBC 125-3	9839
Surface sensor NTC10K (-30-150C) 1,5 m	TG-A1/NTC10-01	211523
Actuator 0-10V	RVAZ4 24A	9862
2-Way-Valve	ZTV 15-0,4	9829
2-Way-Valve	ZTV 15-0,6	6571
3-Way-Valve	ZTR 15-0,4	9670
3-Way-Valve	ZTR 15-0,6	6573
Electrical Duct Heater	CB 125-0,6 230V/1	5289
Electrical Duct Heater	CB 125-1,2 230V/1	5290
Electrical Duct Heater	CB 125-1,8 230V/1	5377
Preheater KIT 230V	1-Phase kit	142852
Duct Cooler	CWK 125-3-2,5	30021
Filters		
PF VTR 150 STD kit	F7/ePM1 60% Supply M5/ePM10 50% Extract	145777
PF VTR 150 OPT kit 1	F8/ePM1 70% Supply M5/ePM10 50% Extract	145920
BF VTR 150 OPT kit 2	F7/ePM1 60% Supply M5/ePM10 60% Extract	153439
Other		
Combi grille 125, White	CVVX 125, white	26422
Combi grille 125, Black	CVVX 125, black	26421
Outdoor grille Ø125 White	-	477990
Outdoor grille Ø125 Black	-	486800
Outdoor grille Ø125 Magnelis	-	487400
Fast clamp 125	FK 125	1608
Connection duct D125/1,0 M/F	SCD Flexible Silencer	2556
Silencer	LDC 125-600	5190
Silencer	LDC 125-900	5191
Control damper	TUNE-R-125-3-M1	311938
Control damper (Spring)	TUNE-R-125-3-M4	311968
Relay mounting kit	RMK Kit Systemair	576801
Control damper	TUNE-R-125-3-M2	311948
Control damper (Spring)	TUNE-R-125-3-M5	311978
Transformer 24V	PSS20 24V	202692
Iris Damper	SPI-125 C	6751
Pressure guard with pitot tube	DPR200T	212987
Duct cover, White	Duct cover W VTR 150/B	319090
Duct cover, Stainless	Duct cover SS VTR 150	19567
Cookerhood, White	MONOLIT - B White	326800
Cookerhood, Stainless	MONOLIT - B S.Steel	326801
Cookerhood Slimline, White	392-10/B Slimline White	77265
Front Cover, White	VTR 150/B+MONOLIT - B White	157226
Front Cover, Stainless	VTR 150/B+MONOLIT - B S.Steel	318976
Front Cover, White	VTR 150/B+Slimline White	317600
Front Cover, Stainless	VTR 150/B+Slimline S.Steel	317602

Supply
Exhaust
Fresh air/supply
Extract

SAVE VTR 150/K



SAVE VTR 150/K is a top connected unit with an integrated cooker hood designed for installation in the kitchen above the hob, with high efficiency step less rotary heat exchanger. Adapted for ventilation of smaller houses and apartments with a ventilated area of up to 115 m². Energy efficiency class A is available together with external demand control accessory.

VTR 150/K is white painted or stainless, double skinned, fully insulated and comes with complete control functionality. The unit accurately controls the speed of the heat exchanger after the need of heat/cooling recovery using the step less rotor motor.

SAVE CONNECT internet access module is delivered as standard with all units for remote control via mobile APP.

SAVE PRO web application for own or client device remote monitoring, control and troubleshooting.

Download SAVE CONNECT app via Google Play or Apple store.

- High efficiency rotating heat exchanger with variable speed drive and high performance EC fans
- Modern design with integrated high quality kitchen hood
- Demand ventilation control is standard with the built in humidity sensor
- Built in electrical re-heater
- Selection of different control panels available:
  - SAVE TOUCH for full functionality
  - SAVE LIGHT for basic functionality
- Connection board for easy access
- Modbus communication RS-485 as standard

Mid-frequency band, Hz (SAVE VTR 150/K R)									
LwA dB(A)	**Tot**	63	125	250	500	1k	2k	4k	8k
Supply	**66**	78	71	69	64	59	57	51	47
Extract	**58**	71	62	66	53	41	33	21	21
Surrounding	**41**	51	43	48	37	29	27	21	23

Mid-frequency band, Hz (SAVE VTR 150/K L)									
LwA dB(A)	**Tot**	63	125	250	500	1k	2k	4k	8k
Supply	**68**	76	70	70	67	60	57	50	46
Extract	**60**	71	63	67	53	43	33	22	21
Surrounding	**43**	57	44	49	37	31	28	22	22

The sound data table indicates the sound power level LwA, which should not be confused with the sound pressure level LpA (based on the operation point - 54 l/s at 50 Pa).

Technical data SAVE VTR 150/K		Right	Left
Art. no. White, 500 W		488892	488893
Art. no. Stainless steel, 500 W		488896	488897
Art. no. White, 1000 W		488890	488891
Art. no. Stainless steel, 1000 W		488894	488895
Energy efficiency class			
Standard unit		A	A
Standard unit with accessories*		A	A
Voltage/Frequency	V/50 Hz	230	230
Power rating per fan	W	35	35
at example duty point:		50 l/s	54 l/s
		at 50 Pa	at 50 Pa
		181 m³/h	195 m³/h
		at 50 Pa	at 50 Pa
SFP	kW/m³/s	1,38	1,3
Efficiency according EN 13141-7		79%	79%
Fuse	A	10	10
Electrical heating battery	W	500/1000	500/1000
Electrical re-heater power	W	2 x 83	2 x 83
Filter, supply air			
Pleat filter (PF)		F7/ePM1 60%	
Filter, extract air			
Pleat filter (PF)		M5/ePM10 50%	
Weight	kg	61	61

* With Indoor Air Quality accessories

SFP = Specific Fan Power (kW/m³/s)
The SFP value stated applies to the complete unit.

Performance data (Right unit)

Supply air

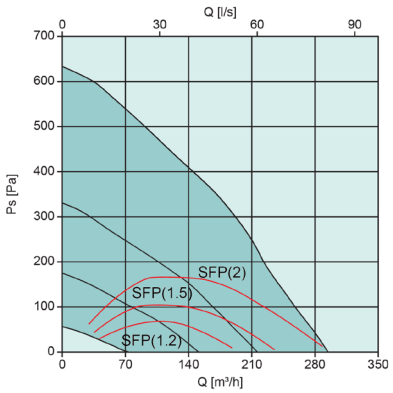

Extract air

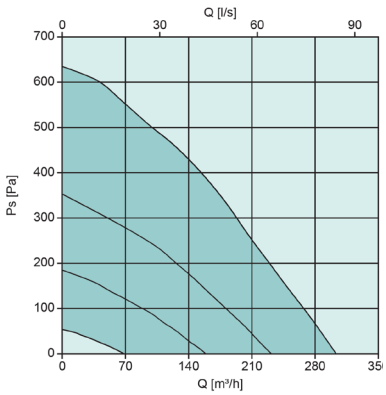

Scheme

Right-hand version

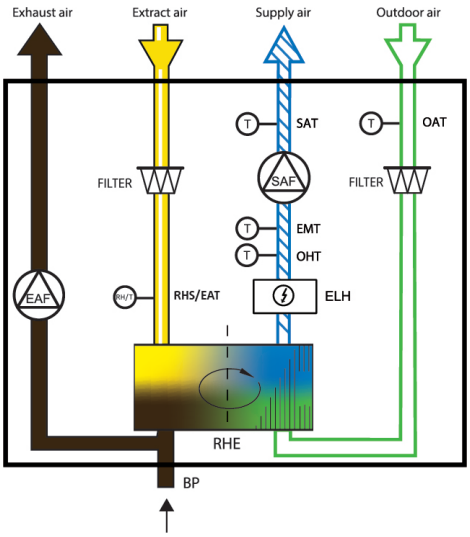

SAF	Supply fan
EAF	Extract fan
FILTER	Extract/Supply filter
OAT	Outdoor air temp. sensor
SAT	Supply air temp. sensor
RHS/EAT	Relative humidity sensor/Extract air temp. sensor
ELH	Electric heater
OHT	Overheating thermostat
EMT	Emergency thermostat
BP	Bypass cooker hood
RHE	Rotating Heat Exchanger

Dimensions

SAVE VTR 150/K Right-hand version

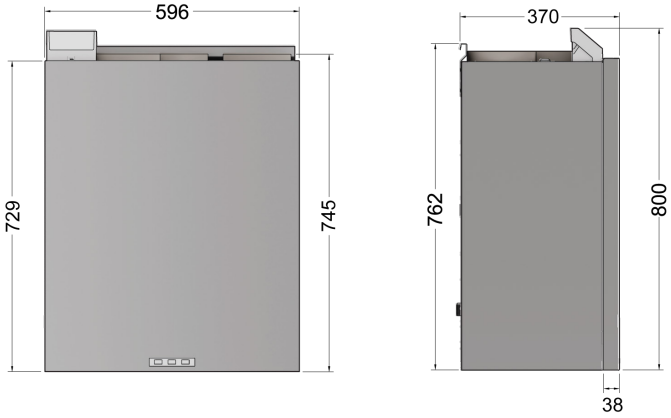

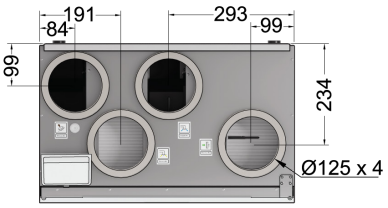

Supply
Exhaust
Fresh air/supply
Extract

Accessories

Accessories SAVE VTR 150/K		Art. no.
Controls		
SAVE TOUCH White	Touch display white	138077
SAVE TOUCH Black	Touch display black	138078
SAVE LIGHT White	SAVE Light White	319118
SAVE LIGHT Black	SAVE Light Black	319119
SAVE Wall Mounted Kit	Control panel frame	140736
CEC Cable 12m	VK-12	24782
CEC Cable 6m	VK-6	24783
Diverting Plug	Diverting Plug	37367
Indoor Air Quality Wired		
Systemair-E CO2 sensor	T8100-E-SA-1000RTD	14904
Systemair-E CO2 + RH + Temperature	T8100-E-H-SA-10R	211522
Systemair-1 CO2 duct sensor	T8041	14906
Duct sensor NTC10K (-30-70C) 1,5 m	TG-K3/NTC10-01	211524
Room sensor NTC10K (0-50C)	TG-R5/NTC10-01	211525
Presence detector	-	6995
VAV/CAV conversion kit	-	140777
Heating / Cooling		
Duct Water heating battery 2 Rows	VBC 125-2	5457
Duct Water heating battery 3 Rows	VBC 125-3	9839
Surface sensor NTC10K (-30-150C) 1,5 m	TG-A1/NTC10-01	211523
Actuator 0-10V	RVAZ4 24A	9862
2-Way-Valve	ZTV 15-0,4	9829
2-Way-Valve	ZTV 15-0,6	6571
3-Way-Valve	ZTR 15-0,4	9670
3-Way-Valve	ZTR 15-0,6	6573
Electrical Duct Heater	CB 125-0,6 230V/1	5289
Electrical Duct Heater	CB 125-1,2 230V/1	5290
Electrical Duct Heater	CB 125-1,8 230V/1	5377
Preheater KIT 230V	1-Phase kit	142852
Duct Cooler	CWK 125-3-2,5	30021
Filters		
PF VTR 150 STD kit	F7/ePM1 60% Supply M5/ePM10 50% Extract	145777
PF VTR 150 OPT kit 1	F8/ePM1 70% Supply M5/ePM10 50% Extract	145920
BF VTR 150 OPT kit 2	F7/ePM1 60% Supply M5/ePM10 60% Extract	153439
Other		
Combi grille 125, White	CVVX 125, white	26422
Combi grille 125, Black	CVVX 125, black	26421
Outdoor grille Ø125 White	-	477990
Outdoor grille Ø125 Black	-	486800
Outdoor grille Ø125 Magnelis	-	487400
Fast clamp 125	FK 125	1608
Connection duct D125/1,0 M/F	SCD Flexible Silencer	2556
Silencer	LDC 125-600	5190
Silencer	LDC 125-900	5191
Control damper	TUNE-R-125-3-M1	311938
Control damper (Spring)	TUNE-R-125-3-M4	311968
Relay mounting kit	RMK Kit Systemair	576801
Control damper	TUNE-R-125-3-M2	311948
Control damper (Spring)	TUNE-R-125-3-M5	311978
Transformer 24V	PSS20 24V	202692
Iris Damper	SPI-125 C	6751
Pressure guard with pitot tube	DPR200T	212987
Duct cover, White	Duct cover W VTR 150/K	19566
Duct cover, Stainless	Duct cover SS VTR 150	19567

SAVE VTR 275/B



SAVE VTR 275/B is a top connected unit with high efficiency step less rotary heat exchanger with cooker hood connection designed for installation on the wall in a home with a ventilated area of up to approx. 220 m².

VTR 275/B is white painted, double skinned, fully insulated and comes with complete control functionality. The unit accurately controls the speed of the heat exchanger after the need of heat/cooling recovery using the step less rotor motor.

SAVE CONNECT internet access module is delivered as standard with all units for remote control via mobile APP.

SAVE PRO web application for own or client device remote monitoring, control and troubleshooting.

Download SAVE CONNECT app via Google Play or Apple store.

- High efficiency rotating heat exchanger with variable speed drive and high performance EC fans
- By-pass channel for connecting the kitchen hood
- Demand ventilation control is standard with the built in humidity sensor
- Selection of different control panels available:
  - SAVE TOUCH for full functionality
  - SAVE LIGHT for basic functionality
- Connection board for easy access
- Modbus communication RS-485 as standard

Mid-frequency band, Hz									
LwA dB(A)	Tot	63	125	250	500	1k	2k	4k	8k
Supply air	65	72	69	69	62	57	52	44	33
Extract air	56	73	61	63	52	44	36	25	24
Surrounding	40	46	42	46	38	29	26	20	24

The sound data table indicates the sound power level LwA, which should not be confused with the sound pressure level LpA (based on the operation point - 61 l/s at 50 Pa).

Technical data SAVE VTR 275/B		
Art. no. 500W	Right/Left	488879/488880
Art. no. 1000W	Right/Left	588879/588880
Energy efficiency class		
Standard unit		A
Standard unit with accessories*		A
Voltage/Frequency	V/50 Hz	230
Power rating per fan	W	34
at example duty point:		61 l/s at 50 Pa
		221m³/h at 50 Pa
SFP	kW/m³/s	1,20
Efficiency according EN 13141-7		79%
Fuse	A	10
Electrical re-heater power	W	500/1000
Input power, fan motor	W	2 x 81
Filter, supply air		
Pleat filter (PF)		F7/ePM1 60%
Filter, extract air		
Pleat filter (PF)		M5/ePM10 50%
Weight	kg	46

* With Indoor Air Quality accessories

SFP = Specific Fan Power (kW/m³/s)
The SFP value stated applies to the complete unit.

Performance data (Right unit)

Supply air

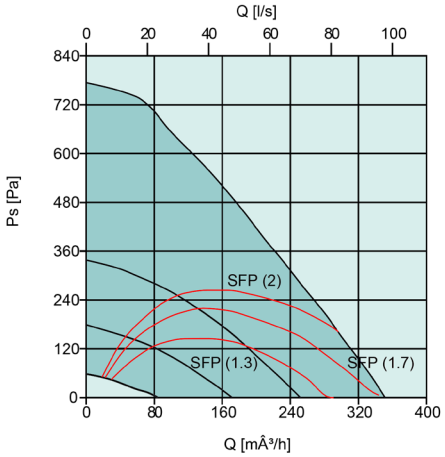

Extract air

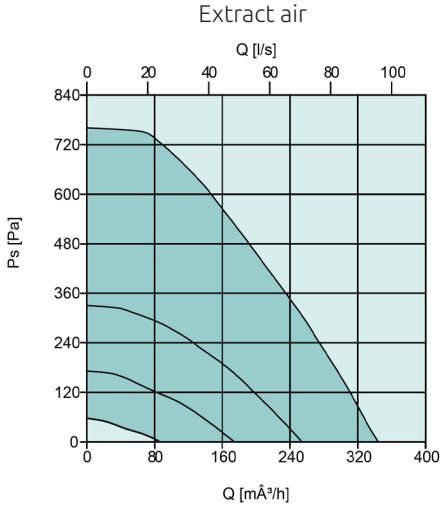

Scheme

Right-hand version

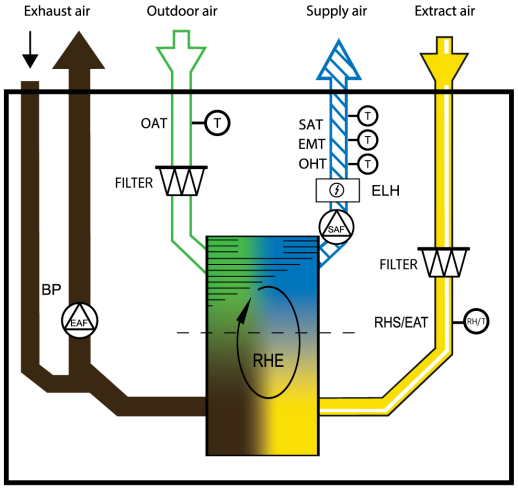

SAF	Supply fan
EAF	Extract fan
FILTER	Extract/Supply filter
OAT	Outdoor air temp. sensor
SAT	Supply air temp. sensor
RHS/EAT	Relative humidity sensor/Extract air temp. sensor
BP	Bypass cooker hood
RHE	Rotating Heat Exchanger

Dimensions

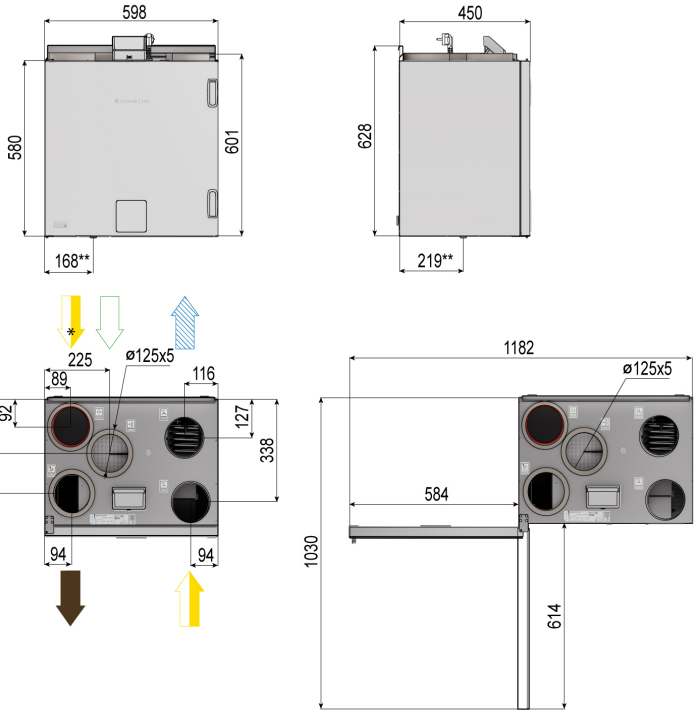

Accessories

Accessories SAVE VTR 275/B		Art. no.
Controls		
SAVE TOUCH White	Touch display white	138077
SAVE TOUCH Black	Touch display black	138078
SAVE LIGHT White	SAVE Light White	319118
SAVE LIGHT Black	SAVE Light Black	319119
SAVE Wall Mounted Kit	Control panel frame	140736
CEC Cable 12m	VK-12	24782
CEC Cable 6m	VK-6	24783
Diverting Plug	Diverting Plug	37367
Indoor Air Quality Wired		
Systemair-E CO2 sensor	T8100-E-SA-1000RTD	14904
Systemair-E CO2 + RH + Temperature	T8100-E-H-SA-10R	211522
Systemair-1 CO2 duct sensor	T8041	14906
Duct sensor NTC10K (-30-70C) 1,5 m	TG-K3/NTC10-01	211524
Room sensor NTC10K (0-50C)	TG-R5/NTC10-01	211525
Presence detector	-	6995
VAV/CAV conversion kit	-	140777
Heating / Cooling		
Duct Water heating battery 2 Rows	VBC 125-2	5457
Duct Water heating battery 3 Rows	VBC 125-3	9839
Surface sensor NTC10K (-30-150C) 1,5 m	TG-A1/NTC10-01	211523
Actuator 0-10V	RVAZ4 24A	9862
2-Way-Valve	ZTV 15-0,4	9829
2-Way-Valve	ZTV 15-0,6	6571
3-Way-Valve	ZTR 15-0,4	9670
3-Way-Valve	ZTR 15-0,6	6573
Electrical Duct Heater	CB 125-0,6 230V/1	5289
Electrical Duct Heater	CB 125-1,2 230V/1	5290
Electrical Duct Heater	CB 125-1,8 230V/1	5377
Preheater KIT 230V	1-Phase kit	142852
Duct Cooler	CWK 125-3-2,5	30021
Filters		
PF VTR275 STD kit	F7/ePM1 60% Supply M5/ePM10 50% Extract	278568
PF VTR275 OPT kit	F8/ePM1 70% Supply M5/ePM10 50% Extract	278569
Other		
Combi grille 125, White	CVVX 125, white	26422
Combi grille 125, Black	CVVX 125, black	26421
Outdoor grille Ø125 White	-	477990
Outdoor grille Ø125 Black	-	486800
Outdoor grille Ø125 Magnelis	-	487400
Fast clamp 125	FK 125	1608
Connection duct D125/1,0 M/F	SCD Flexible Silencer	2556
Silencer	LDC 125-600	5190
Silencer	LDC 125-900	5191
Control damper	TUNE-R-125-3-M1	311938
Control damper (Spring)	TUNE-R-125-3-M4	311968
Relay mounting kit	RMK Kit Systemair	576801
Control damper	TUNE-R-125-3-M2	311948
Control damper (Spring)	TUNE-R-125-3-M5	311978
Transformer 24V	PSS20 24V	202692
Iris Damper	SPI-125 C	6751
Pressure guard with pitot tube	DPR200T	212987
Cookerhood, White	MONOLIT - B White	326800
Cookerhood, Stainless	MONOLIT - B S.Steel	326801
Cookerhood Slimline, White	392-10/B Slimline White	77265
Drainage kit	Drain pipe kit	146077

Supply
Exhaust
Fresh air/supply
Extract

* Cooker hood connection
*** Drainage connection

SAVE VTR 350/B



SAVE VTR 350/B is a top connected unit with high efficiency variable speed rotary heat exchanger with cooker hood connection designed for installation on the wall in a home with a ventilated area of up to approx. 300 m².

VTR 350/B is white painted, double skinned, fully insulated and comes with complete control functionality. The unit accurately controls the speed of the heat exchanger after the need of heat/cooling recovery using the step less rotor motor.

SAVE CONNECT internet access module is delivered as standard with all units for remote control via mobile APP.

SAVE PRO web application for own or client device remote monitoring, control and troubleshooting.

Download SAVE CONNECT app via Google Play or Apple store.

- High efficiency rotating heat exchanger with variable speed drive and high performance EC fans
- By-pass channel for connecting the kitchen hood
- Demand ventilation control is standard with the built in humidity sensor
- Built in electrical re-heater
- Water heater battery available as accessory
- Selection of different control panels available:
  - SAVE TOUCH for full functionality
  - SAVE LIGHT for basic functionality
- Connection board for easy access
- Modbus communication RS-485 as standard

Mid-frequency band, Hz									
LwA dB(A)	**Tot**	63	125	250	500	1k	2k	4k	8k
Supply air	**66**	76	72	66	67	58	57	52	40
Extract air	**57**	68	60	62	54	46	40	27	21
Surrounding	**44**	53	52	47	43	32	31	24	20

The sound data table indicates the sound power level LwA, which should not be confused with the sound pressure level LpA (based on the operation point - 98 l/s at 50 Pa).

Technical data SAVE VTR 350/B		
Art. no.	Right/Left	488920/488921
Energy efficiency class		
Standard unit		A
Standard unit with accessories*		A
Voltage/Frequency	V/50Hz	230
Power rating per fan	W	70
at example duty point:		98 l/s at 50 Pa
		353 m³/h at 50 Pa
SFP	kW/m³/s	1,43
Efficiency according EN 13141-7		82%
Fuse	A	13
Electrical re-heater power	W	1670
Input power, fan motor	W	2 x 169
Filter, supply air		
Pleat filter (PF)		F7/ePM1 60%
Filter, extract air		
Pleat filter (PF)		M5/ePM10 50%
Weight	kg	66

* With Indoor Air Quality accessories

SFP = Specific Fan Power (kW/m³/s)
The SFP value stated applies to the complete unit.

Performance data (Right unit)

Supply air

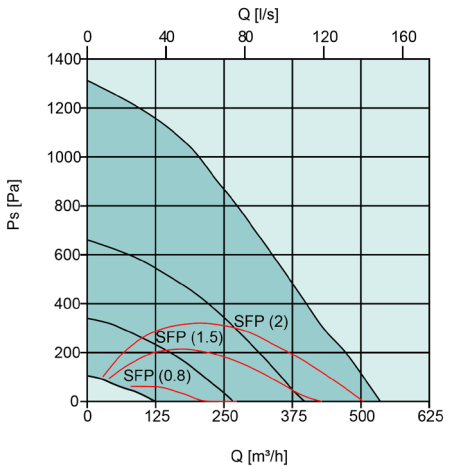

Extract air

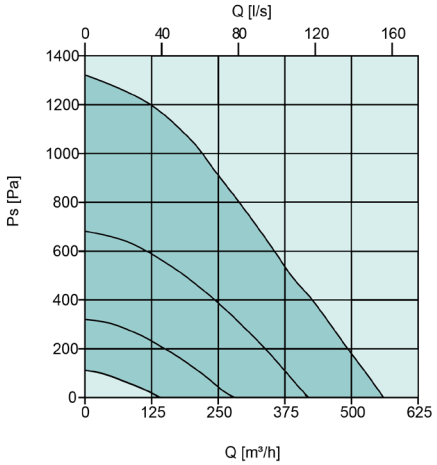

Scheme

Right-hand version

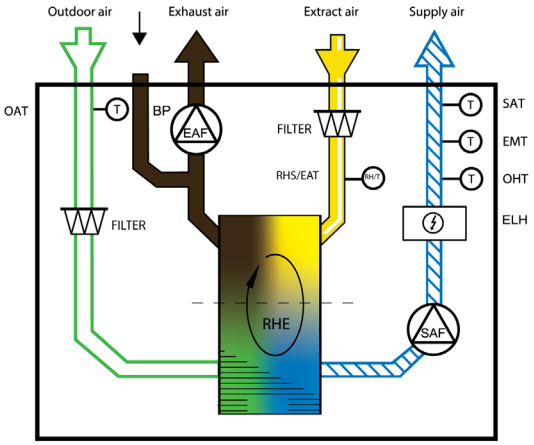

SAF	Supply fan
EAF	Extract fan
FILTER	Extract/Supply filter
OAT	Outdoor air temp. sensor
SAT	Supply air temp. sensor
RHS/EAT	Relative humidity sensor/Extract air temp. sensor
ELH	Electric heater
OHT	Overheating thermostat
EMT	Emergency thermostat
BP	Bypass cooker hood
RHE	Rotating Heat Exchanger

Dimensions

SAVE VTR 350/B Right-hand version

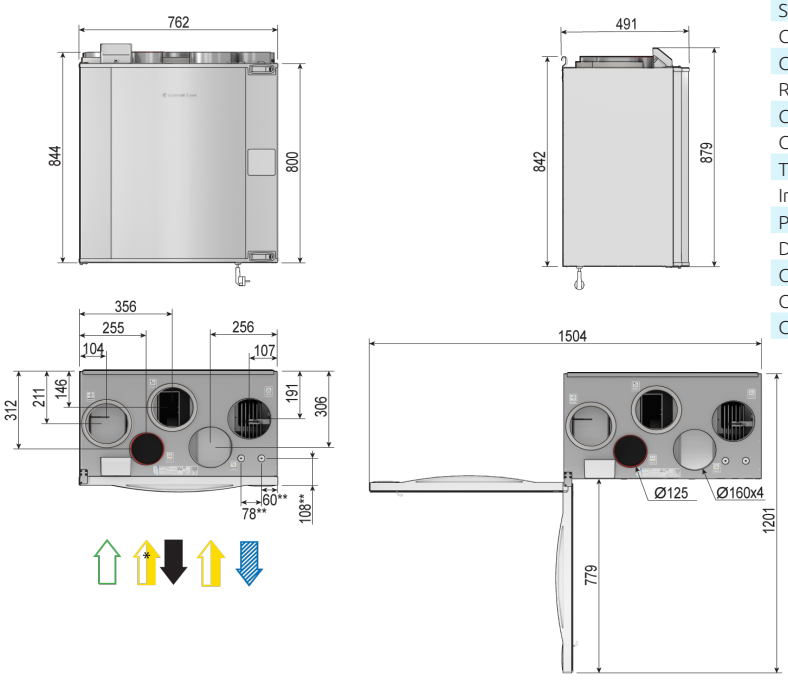

Accessories

Accessories SAVE VTR 350/B		Art. no.
Controls		
SAVE TOUCH White	Touch display white	138077
SAVE TOUCH Black	Touch display black	138078
SAVE LIGHT White	SAVE Light White	319118
SAVE LIGHT Black	SAVE Light Black	319119
SAVE Wall Mounted Kit	Control panel frame	140736
CEC Cable 12m	VK-12	24782
CEC Cable 6m	VK-6	24783
Diverting Plug	Diverting Plug	37367
Indoor Air Quality Wired		
Systemair-E CO2 sensor	T8100-E-SA-1000RTD	14904
Systemair-E CO2 + RH + Temperature	T8100-E-H-SA-10R	211522
Systemair-1 CO2 duct sensor	T8041	14906
Duct sensor NTC10K (-30-70C) 1,5 m	TG-K3/NTC10-01	211524
Room sensor NTC10K (0-50C)	TG-R5/NTC10-01	211525
Presence detector	-	6995
VAV/CAV conversion kit SAVE	-	140777
Heating / Cooling		
Water coil VTR 300/350	WH VTR 300/350/B	141700
Duct Water heating battery 2 Rows	VBC 160-2	5458
Duct Water heating battery 3 Rows	VBC 160-3	9840
Surface sensor NTC10K (-30-150C) 1,5 m	TG-A1/NTC10-01	211523
Actuator 0-10V	RVAZ4 24A	9862
2-Way-Valve	ZTV 15-0,4	9829
2-Way-Valve	ZTV 15-0,6	6571
3-Way-Valve	ZTR 15-0,4	9670
3-Way-Valve	ZTR 15-0,6	6573
Electrical Duct Heater	CB 160-1,2 230V/1	5291
Electrical Duct Heater	CB 160-2,1 230V/1	5292
Electrical Duct Heater	CB 160-2,7 230V/1	5382
Preheater KIT 230V	1-Phase kit	142852
Electrical Duct Heater	CB 160-5,0 400V/2	5383
Duct Cooler	CWK 160-3-2,5	30022
Filters		
PF VTR 300/350 STD kit	F7/ePM1 60% Supply M5/ePM10 50% Extract	246659
PF VTR 300/350 OPT kit	F8/ePM1 70% Supply M5/ePM10 50% Extract	317696
Other		
Combi grille 160, White	CVVX 160, white	25396
Combi grille 160, Black	CVVX 160, black	25394
Outdoor grille Ø160 White	-	466900
Outdoor grille Ø160 Black	-	486900
Outdoor grille Ø160 Magnelis	-	487500
Fast clamp 160	FK 160	1610
Connection duct D160/1,0 M/F	SCD Flexible Silencer	2558
Silencer	LDC 160-600	5192
Silencer	LDC 160-900	5193
Control damper	TUNE-R-160-3-M1	311939
Control damper (Spring)	TUNE-R-160-3-M4	311969
Relay mounting kit	RMK Kit Systemair	576801
Control damper	TUNE-R-160-3-M2	311949
Control damper (Spring)	TUNE-R-160-3-M5	311979
Transformer 24V	PSS20 24V	202692
Iris Damper	SPI-160 C	6753
Pressure guard with pitot tube	DPR200T	212987
Duct cover	Duct cover VTR 300/350	113489
Cookerhood, White	MONOLIT - B White	326800
Cookerhood, Stainless	MONOLIT - B S.Steel	326801
Cookerhood Slimline, White	394-10/B Slimline White	490184

SAVE VTR 500



SAVE VTR 500 is a top connected unit with high efficiency step less rotary heat exchanger designed for installation on the wall in premises with a ventilated area of up to approx. 400 m².

VTR 500 is white painted, double skinned, fully insulated and comes with complete control functionality. The unit accurately controls the speed of the heat exchanger after the need of heat/cooling recovery using the step less rotor motor.

SAVE CONNECT internet access module is delivered as standard with all units for remote control via mobile APP.

SAVE PRO web application for own or client device remote monitoring, control and troubleshooting.

Download SAVE CONNECT app via Google Play or Apple store.

- High efficiency rotating heat exchanger with variable speed drive and high performance EC fans
- Demand ventilation control is standard with the built in humidity sensor
- Built in electrical re-heater
- Water heater battery available as accessory
- Selection of different control panels available:
  - SAVE TOUCH for full functionality
  - SAVE LIGHT for basic functionality
- Connection board for easy access
- Modbus communication RS-485 as standard

Technical data SAVE VTR 500		
Art. no.	Right/Left	488830/488831
Energy efficiency class		
Standard unit		A
Standard unit with accessories*		A
Voltage/Frequency	V/50Hz	230
Power rating per fan	W	67
at example duty point:		111 l/s at 50 Pa
		400 m³/h at 50 Pa
SFP	kW/m³/s	1,2
Efficiency according EN 13141-7		84%
Fuse	A	13
Electrical re-heater power	W	1670
Input power, fan motor	W	2 x 170
Filter, supply air		
Bag filter (BF)		F7/ePM1 60%
Filter, extract air		
Bag filter (BF)		M5/ePM10 60%
Weight	kg	85

* With Indoor Air Quality accessories

Mid-frequency band, Hz									
LwA dB(A)	**Tot**	63	125	250	500	1k	2k	4k	8k
Supply air	**69**	73	69	71	68	58	59	54	50
Extract air	**61**	73	68	66	59	49	47	38	30
Surrounding	**46**	49	52	51	44	35	34	32	28

The sound data table indicates the sound power level LwA, which should not be confused with the sound pressure level LpA (based on the operation point - 111 l/s at 50 Pa).

SFP = Specific Fan Power (kW/m³/s)
The SFP value stated applies to the complete unit.

Performance data (Right unit)

Supply air

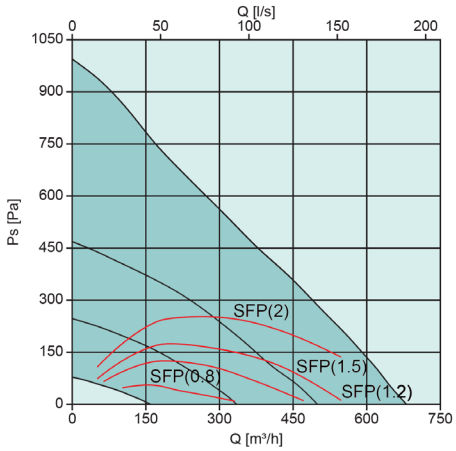

Extract air

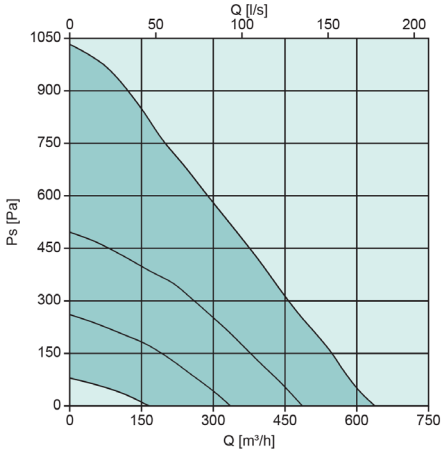

Scheme

Right-hand version

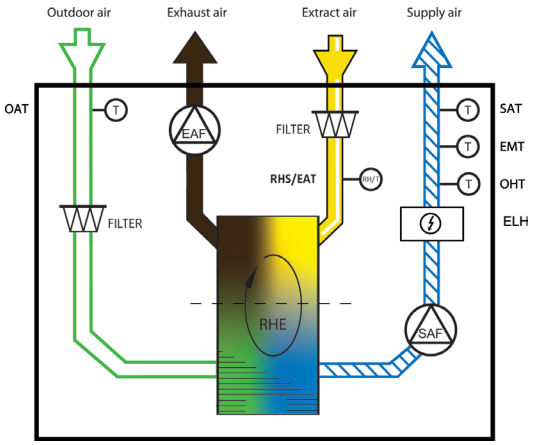

SAF	Supply fan
EAF	Extract fan
FILTER	Extract/Supply filter
OAT	Outdoor air temp. sensor
SAT	Supply air temp. sensor
RHS/EAT	Relative humidity sensor/Extract air temp. sensor
ELH	Electric heater
OHT	Overheating thermostat
EMT	Emergency thermostat
BP	Bypass cooker hood
RHE	Rotating Heat Exchanger

Dimensions

SAVE VTR 500 Right-hand version

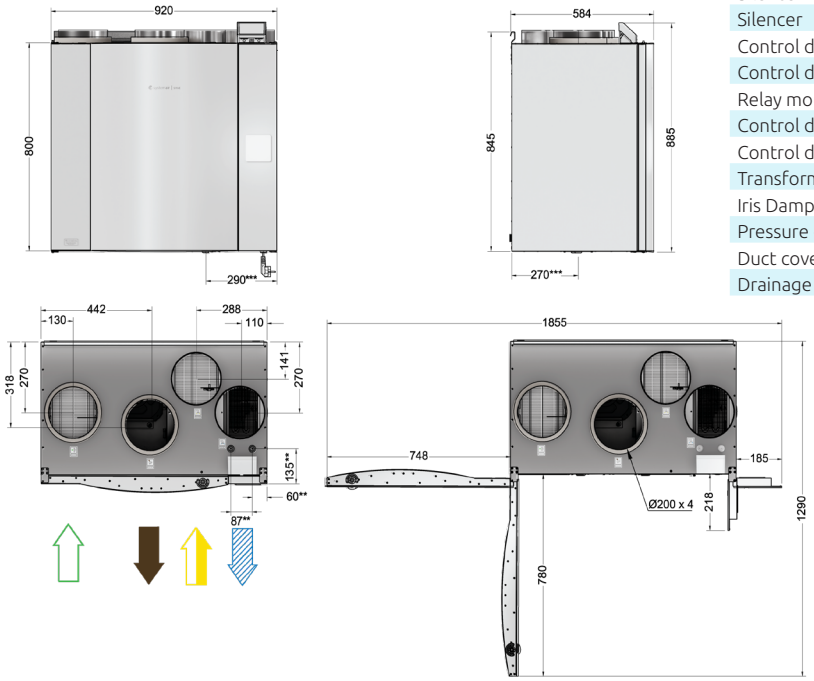



** Water battery connections
*** Drainage connection

Accessories

Accessories SAVE VTR 500		Art. no.
Controls		
SAVE TOUCH White	Touch display white	138077
SAVE TOUCH Black	Touch display black	138078
SAVE LIGHT White	SAVE Light White	319118
SAVE LIGHT Black	SAVE Light Black	319119
SAVE Wall Mounted Kit	Control panel frame	140736
CEC Cable 12m	VK-12	24782
CEC Cable 6m	VK-6	24783
Diverting Plug	Diverting Plug	37367
Indoor Air Quality Wired		
Systemair-E CO2 sensor	T8100-E-SA-1000RTD	14904
Systemair-E CO2 + RH + Temperature	T8100-E-H-SA-10R	211522
Systemair-1 CO2 duct sensor	T8041	14906
Duct sensor NTC10K (-30-70C) 1,5 m	TG-K3/NTC10-01	211524
Room sensor NTC10K (0-50C)	TG-R5/NTC10-01	211525
Presence detector	-	6995
VAV/CAV conversion kit	-	140777
Heating / Cooling		
Water coil VTR 500	WH VTR 500	141701
Duct Water heating battery 2 Rows	VBC 200-2	5459
Duct Water heating battery 3 Rows	VBC 200-3	9841
Surface sensor NTC10K(-30-150C)1,5 m	TG-A1/NTC10-01	211523
Actuator 0-10V	RVAZ4 24A	9862
2-Way-Valve	ZTV 15-0,6	6571
2-Way-Valve	ZTV 15-1,0	9823
3-Way-Valve	ZTR 15-0,6	6573
3-Way-Valve	ZTR 15-1,0	9672
Electrical Duct Heater	CB 200-2,1 230V/1	5384
Electrical Duct Heater	CB 200-3,0 230V/1	5370
Electrical Duct Heater	CB 200-3,0 400V/2	5384
Electrical Duct Heater	CB 200-5,0 400V/2	5371
Preheater KIT 230V	1-Phase kit	142852
Duct Cooler	CWK 200-3-2,5	30023
Filters		
BF VTR 500 STD kit	F7/ePM1 60% Supply M5/ePM10 60% Extract	25315
BF VTR 500 OPT kit 1	F8/ePM1 70% Supply M5/ePM10 60% Extract	317697
Other		
Combi grille 200, White	CVVX 200, white	25397
Combi grille 200, Black	CVVX 200, black	25395
Outdoor grille Ø200 White	-	478090
Outdoor grille Ø200 Black	-	487100
Outdoor grille Ø200 Magnelis	-	487600
Fast clamp 200	FK 200	1611
Connection duct D200/1,0 M/F	SCD Flexible Silencer	2560
Silencer	LDC 200-600	5194
Silencer	LDC 200-900	5195
Control damper	TUNE-R-200-3-M1	311940
Control damper (Spring)	TUNE-R-200-3-M4	311970
Relay mounting kit	RMK Kit Systemair	576801
Control damper	TUNE-R-200-3-M2	311950
Control damper (Spring)	TUNE-R-200-3-M5	311980
Transformer 24V	PSS20 24V	202692
Iris Damper	SPI-200 C	6754
Pressure guard with pitot tube	DPR200T	212987
Duct cover	Duct cover VTR 500	124497
Drainage kit	Drain pipe kit	146077

SAVE VTR 700



SAVE VTR 700 is a top connected unit with high efficiency step less rotary heat exchanger designed for installation on the floor in premises with a ventilated area of up to approx. 550 m². Energy efficiency class A+ is available together with external demand control accessory.

VTR 700 is white painted, double skinned, fully insulated and comes with complete control functionality. The unit accurately controls the speed of the heat exchanger after the need of heat/cooling recovery using the step less rotor motor.

SAVE CONNECT internet access module is delivered as standard with all units for remote control via mobile APP.

SAVE PRO web application for own or client device remote monitoring, control and troubleshooting.

Download SAVE CONNECT app via Google Play or Apple store.

- High efficiency rotating heat exchanger with variable speed drive and high performance EC fans
- Demand ventilation control is standard with the built in humidity sensor
- Electrical re-heater / water heater is available as accessory
- Selection of different control panels available:
  - SAVE TOUCH for full functionality
  - SAVE LIGHT for basic functionality
- Connection board for easy access
- Modbus communication RS-485 as standard

Technical data SAVE VTR 700		
Art. no.	Right/Left	488834/488835
Energy efficiency class		
Standard unit		A
Standard unit with accessories*		A+
Voltage/Frequency	V/50Hz	230
Power rating per fan	W	69
at example duty point:		185 l/s at 50 Pa
		666 m³/h at 50 Pa
SFP	kW/m³/s	0,74
Efficiency according EN 13141-7		82%
Fuse	A	13
Input power, fan motor	W	2 x 170
Filter, supply air		
Pleat filter (PF)		F7/ePM1 60%
Filter, extract air		
Pleat filter (PF)		M5/ePM10 50%
Weight	kg	188

* With Indoor Air Quality accessories

SFP = Specific Fan Power (kW/m³/s)
The SFP value stated applies to the complete unit.

Mid-frequency band, Hz									
LwA dB(A)	**Tot**	63	125	250	500	1k	2k	4k	8k
Supply air	**65**	78	68	70	62	55	54	50	36
Extract air	**56**	66	68	63	49	46	38	32	22
Surrounding	**41**	55	47	49	36	28	24	22	11

The sound data table indicates the sound power level LwA, which should not be confused with the sound pressure level LpA (based on the operation point - 185 l/s at 50 Pa).

Performance data (Right unit)

Supply air

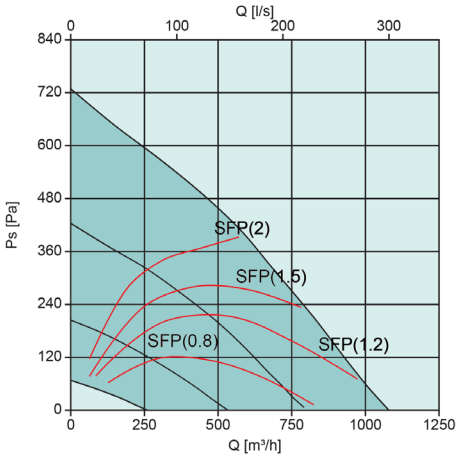

Extract air

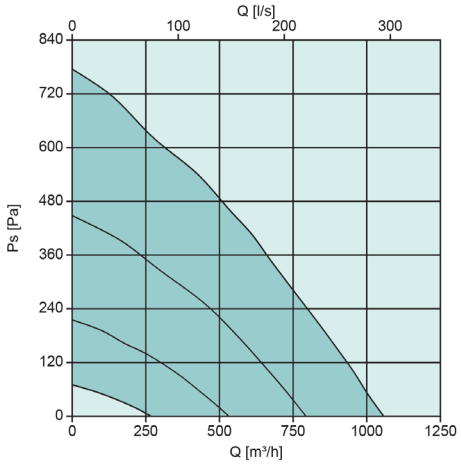

Scheme

Right-hand version

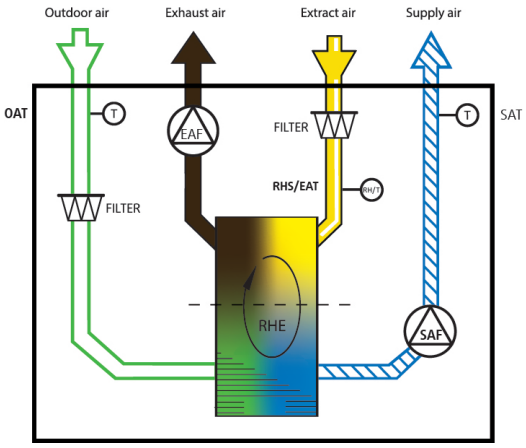

SAF	Supply fan
EAF	Extract fan
FILTER	Extract/Supply filter
OAT	Outdoor air temp. sensor
SAT	Supply air temp. sensor
RHS/EAT	Relative humidity sensor/Extract air temp. sensor
ELH	Electric heater
OHT	Overheating thermostat
EMT	Emergency thermostat
BP	Bypass cooker hood
RHE	Rotating Heat Exchanger

Dimensions

SAVE VTR 700 Right-hand version

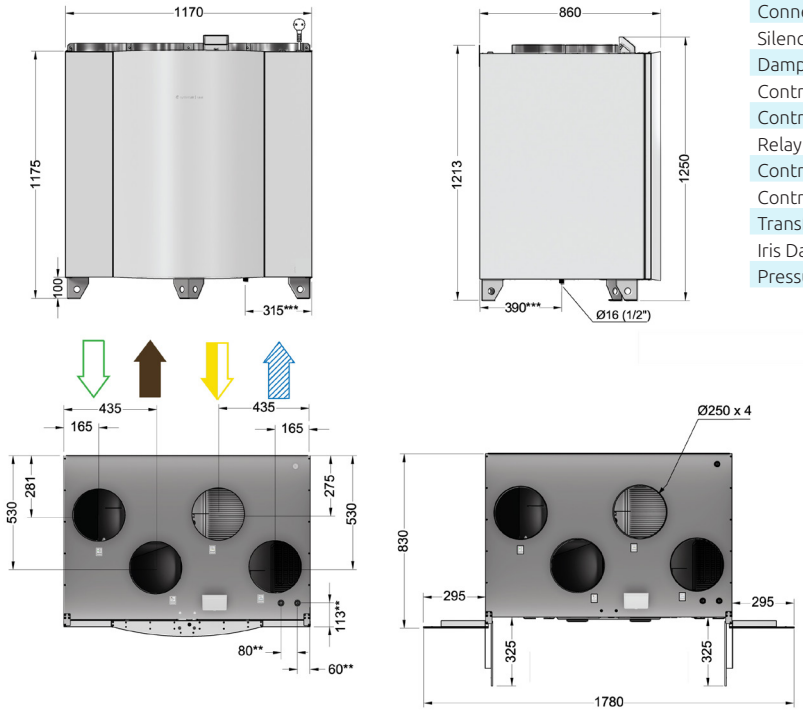

Accessories

Accessories SAVE VTR 700		Art. no.
Controls		
SAVE TOUCH White	Touch display white	138077
SAVE TOUCH Black	Touch display black	138078
SAVE LIGHT White	SAVE Light White	319118
SAVE LIGHT Black	SAVE Light Black	319119
SAVE Wall Mounted Kit	Control panel frame	140736
CEC Cable 12m	VK-12	24782
CEC Cable 6m	VK-6	24783
Diverting Plug	Diverting Plug	37367
Indoor Air Quality Wired		
Systemair-E CO2 sensor	T8100-E-SA-1000RTD	14904
Systemair-E CO2 + RH + Temperature	T8100-E-H-SA-10R	211522
Systemair-1 CO2 duct sensor	T8041	14906
Duct sensor NTC10K (-30-70C) 1,5 m	TG-K3/NTC10-01	211524
Room sensor NTC10K (0-50C)	TG-R5/NTC10-01	211525
Presence detector	-	6995
VAV/CAV conversion kit	-	140777
Heating / Cooling		
Water coil VTR 700 R	WH VTR 700 R	141101
Water coil VTR 700 L	WH VTR 700 L	138101
Duct Water heating battery 2 Rows	VBC 250-2	5460
Duct Water heating battery 3 Rows	VBC 250-3	9843
Surface sensor NTC10K(-30-150C)1,5 m	TG-A1/NTC10-01	211523
Actuator 0-10V	RVAZ4 24A	9862
2-Way-Valve	ZTV 15-1,6	9824
3-Way-Valve	ZTR 15-1,6	9673
El. Reheater VTR 700 R	ELH VTR 700 R 1,67kW	141100
El. Reheater VTR 700 L	ELH VTR 700 L 1,67kW	138100
Electrical Duct Heater	CB 250-3,0 230V/1	5385
Preheater KIT 230V	1-Phase kit	142852
Electrical Duct Heater	CB 250-6,0 400V/2	5372
Electrical Duct Heater	CB 250-9,0 400V/3	5373
Preheater KIT 400V	2/3-Phase kit	151612
Duct Cooler	CWK 250-3-2,5	30024
Filters		
PF VTR/VTC 700 STD kit	F7/ePM1 60% Supply M5/ePM10 50% Extract	145849
PF VTR/VTC 700 OPT kit 1	F8/ePM1 70% Supply M5/ePM10 50% Extract	145924
Other		
Combi grille 250, White	CVVX 250, white	146260
Combi grille 250, Black	CVVX 250, black	8498
Outdoor grille Ø250 White	-	476250
Outdoor grille Ø250 Black	-	487200
Outdoor grille Ø250 Magnelis	-	487700
Fast clamp 250	FK 250	1612
Connection duct D250/1,0 M/F	SCD Flexible Silencer	2561
Silencer	LDC 250-900	5196
Damper + Motor	EFD 250 + TF230	6748
Control damper	TUNE-R-250-3-M1	311941
Control damper (Spring)	TUNE-R-250-3-M4	311971
Relay mounting kit	RMK Kit Systemair	576801
Control damper	TUNE-R-250-3-M2	311951
Control damper (Spring)	TUNE-R-250-3-M5	311981
Transformer 24V	PSS20 24V	202692
Iris Damper	SPI-250 C	6755
Pressure guard with pitot tube	DPR200T	212987

Supply
Exhaust
Fresh air/supply
Extract

** Water battery connections
*** Drainage connection

SAVE VSR 150/B

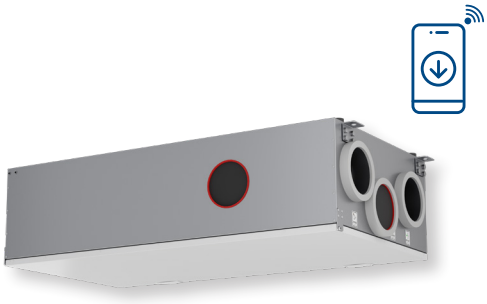

SAVE VSR 150/B is a side connected unit with high efficiency stepless rotary heat exchanger with cooker hood connection designed for installation in the ceiling in a home with a ventilated area of up to approx. 100 m².

VSR 150/B is galvanized, double skinned, fully insulated and comes with complete control functionality. Access door is white painted. The unit accurately controls the speed of the heat exchanger after the need of heat/cooling recovery using the step less rotor motor.

SAVE CONNECT internet access module is delivered as standard with all units for remote control via mobile APP.

SAVE PRO web application for own or client device remote monitoring, control and troubleshooting.

Download SAVE CONNECT app via Google Play or Apple store.

- High efficiency rotating heat exchanger with variable speed drive and high performance EC fans
- By-pass channel for connecting the kitchen hood
- Demand ventilation control is standard with the built in humidity sensor
- Built in electrical re-heater
- Selection of different control panels available:
  - SAVE TOUCH for full functionality
  - SAVE LIGHT for basic functionality
- Connection board for easy access
- Modbus communication RS-485 as standard

Mid-frequency band, Hz									
LwA dB(A)	**Tot**	63	125	250	500	1k	2k	4k	8k
Supply air	**60**	73	67	56	59	56	46	42	29
Extract air	**50**	68	51	50	52	36	23	17	21
Surrounding	**35**	50	44	35	36	24	20	16	20

The sound data table indicates the sound power level LwA, which should not be confused with the sound pressure level LpA (based on the operation point - 33 l/s at 50 Pa).

Technical data SAVE VSR 150/B		
Art. no.	Right/Left	588884/588885
Energy efficiency class		
Standard unit		A
Standard unit with accessories*		A
Voltage/Frequency	V/50 Hz	230
Power rating per fan	W	17
at example duty point:		33 l/s at 50 Pa
		118 m³/h at 50 Pa
SFP	kW/m³/s	0,988
Efficiency according EN 13141-7		85%
Fuse	A	10
Electrical re-heater power	W	500
Input power, fan motor	W	2 x 37
Filter, supply air		
Pleat filter (PF)		F7/ePM1 60%
Filter, extract air		
Pleat filter (PF)		M5/ePM10 50%
Weight	kg	49

* With Indoor Air Quality accessories

SFP = Specific Fan Power (kW/m³/s)
The SFP value stated applies to the complete unit.

Performance data

Supply air

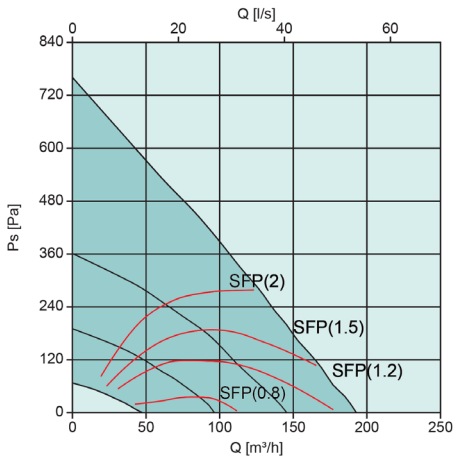

Extract air

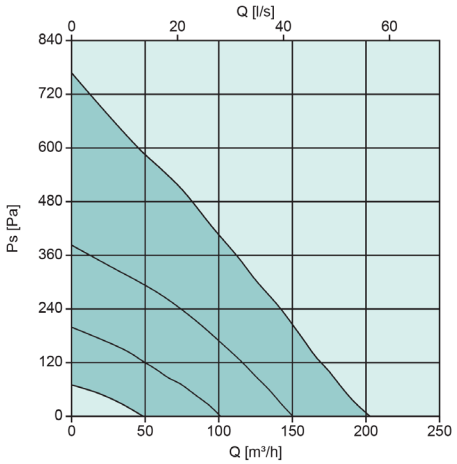

Scheme

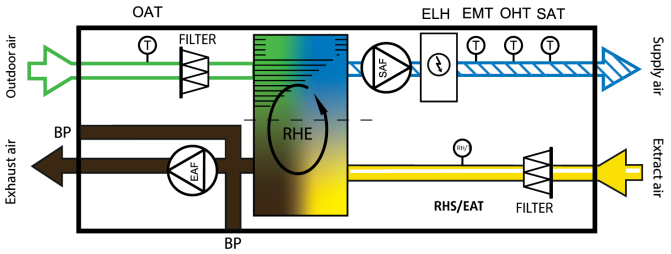

SAF	Supply fan
EAF	Extract fan
FILTER	Extract/Supply filter
OAT	Outdoor air temp. sensor
SAT	Supply air temp. sensor
RHS/EAT	Relative humidity sensor/Extract air temp. sensor
ELH	Electric heater
OHT	Overheating thermostat
EMT	Emergency thermostat
BP	Bypass cooker hood
RHE	Rotating Heat Exchanger

Dimensions

SAVE VSR 150/B Right hand version

* Cooker hood connection

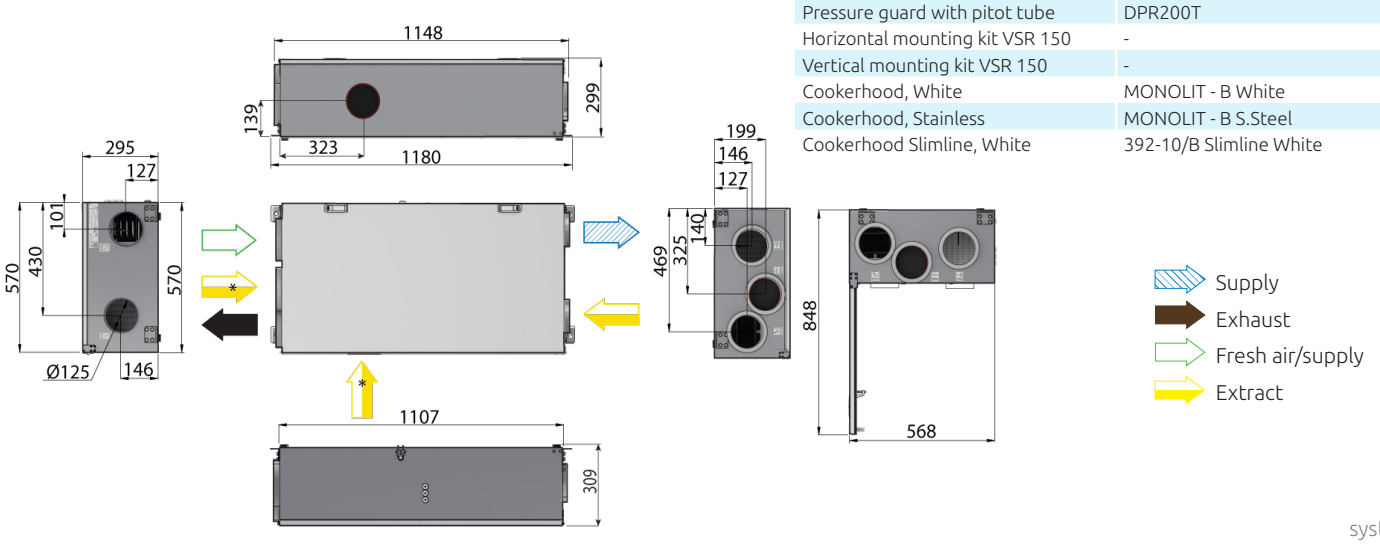

Accessories

Accessories SAVE VSR 150/B		Art. no.
Controls		
SAVE TOUCH White	Touch display white	138077
SAVE TOUCH Black	Touch display black	138078
SAVE LIGHT White	SAVE Light White	319118
SAVE LIGHT Black	SAVE Light Black	319119
SAVE Wall Mounted Kit	Control panel frame	140736
CEC Cable 12m	VK-12	24782
CEC Cable 6m	VK-6	24783
Diverting Plug	Diverting Plug	37367
Indoor Air Quality Wired		
Systemair-E CO2 sensor	T8100-E-SA-1000RTD	14904
Systemair-E CO2 + RH + Temperature	T8100-E-H-SA-10R	211522
Systemair-1 CO2 duct sensor	T8041	14906
Duct sensor NTC10K (-30-70C) 1,5 m	TG-K3/NTC10-01	211524
Room sensor NTC10K (0-50C)	TG-R5/NTC10-01	211525
Presence detector	-	6995
VAV/CAV conversion kit	-	140777
Heating / Cooling		
Duct Water heating battery 2 Rows	VBC 125-2	5457
Duct Water heating battery 3 Rows	VBC 125-3	9839
Surface sensor NTC10K (-30-150C) 1,5 m	TG-A1/NTC10-01	211523
Actuator 0-10V	RVAZ4 24A	9862
2-Way-Valve	ZTV 15-0,4	9829
2-Way-Valve	ZTV 15-0,6	6571
3-Way-Valve	ZTR 15-0,4	9670
3-Way-Valve	ZTR 15-0,6	6573
Electrical Duct Heater	CB 125-0,6 230V/1	5289
Electrical Duct Heater	CB 125-1,2 230V/1	5290
Electrical Duct Heater	CB 125-1,8 230V/1	5377
Preheater KIT 230V	1-Phase kit	142852
Duct Cooler	CWK 125-3-2,5	30021
Filters		
PF VSR 150 STD kit	F7/ePM1 60% Supply M5/ePM10 50% Extract	161651
PF VSR 150 OPT kit 1	F8/ePM1 70% Supply M5/ePM10 50% Extract	161652
Other		
Combi grille 125, White	CVVX 125, white	26422
Combi grille 125, Black	CVVX 125, black	26421
Outdoor grille Ø125 White	-	477990
Outdoor grille Ø125 Black	-	486800
Outdoor grille Ø125 Magnelis	-	487400
Fast clamp 125	FK 125	1608
Connection duct D125/1,0 M/F	SCD Flexible Silencer	2556
Silencer	LDC 125-600	5190
Silencer	LDC 125-900	5191
Control damper	TUNE-R-125-3-M1	311938
Control damper (Spring)	TUNE-R-125-3-M4	311968
Relay mounting kit	RMK Kit Systemair	576801
Control damper	TUNE-R-125-3-M2	311948
Control damper (Spring)	TUNE-R-125-3-M5	311978
Transformer 24V	PSS20 24V	202692
Iris Damper	SPI-125 C	6751
Pressure guard with pitot tube	DPR200T	212987
Horizontal mounting kit VSR 150	-	162999
Vertical mounting kit VSR 150	-	165599
Cookerhood, White	MONOLIT - B White	326800
Cookerhood, Stainless	MONOLIT - B S.Steel	326801
Cookerhood Slimline, White	392-10/B Slimline White	77265

SAVE VSR 200/B



SAVE VSR 200/B is a side connected unit with high efficiency stepless rotary heat exchanger with Cooker hood connection designed for installation in the ceiling in a home with a ventilated area of up to approx. 180 m².

VSR 200/B is galvanized, double skinned, fully insulated and comes with complete control functionality. Access door is white painted. The unit accurately controls the speed of the heat exchanger after the need of heat/cooling recovery using the step less rotor motor.

SAVE CONNECT internet access module is delivered as standard with all units for remote control via mobile APP.

SAVE PRO web application for own or client device remote monitoring, control and troubleshooting.

Download SAVE CONNECT app via Google Play or Apple store.

- High efficiency rotating heat exchanger with variable speed drive and high performance EC fans
- By-pass channel for connecting the kitchen hood
- Demand ventilation control is standard with the built in humidity sensor
- Built in electrical re-heater
- Selection of different control panels available:
  - SAVE TOUCH for full functionality
  - SAVE LIGHT for basic functionality
- Connection board for easy access
- Modbus communication RS-485 as standard

Mid-frequency band, Hz									
LwA dB(A)	**Tot**	63	125	250	500	1k	2k	4k	8k
Supply air	**62**	81	68	63	60	52	50	41	29
Extract air	**53**	70	50	60	48	33	28	20	24
Surrounding	**43**	53	43	49	40	28	25	19	24

The sound data table indicates the sound power level LwA, which should not be confused with the sound pressure level LpA (based on the operation point - 55 l/s at 50 Pa).

Technical data SAVE VSR 200/B		
Art. no.	Right/Left	588863/588864
Energy efficiency class		
Standard unit		A
Standard unit with accessories*		A
Voltage/Frequency	V/50 Hz	230
Power rating per fan	W	30
at example duty point:		55 l/s at 50 Pa
		199 m³/h at 50 Pa
SFP	kW/m³/s	1,09
Efficiency according EN 13141-7		83%
Fuse	A	10
Electrical re-heater power	W	1000
Input power, fan motor	W	2 x 83
Filter, supply air		
Pleat filter (PF)		F7/ePM1 60%
Filter, extract air		
Pleat filter (PF)		M5/ePM10 50%
Weight	kg	56

* With Indoor Air Quality accessories

SFP = Specific Fan Power (kW/m³/s)
The SFP value stated applies to the complete unit.

Performance data

Supply air

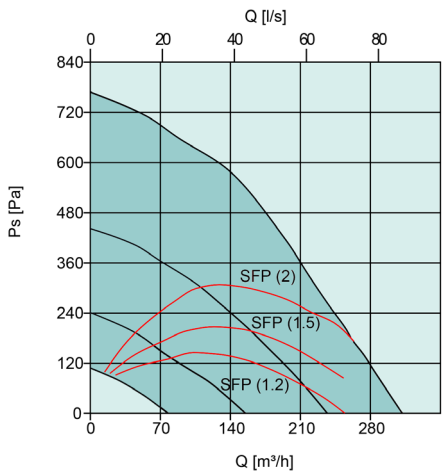

Extract air

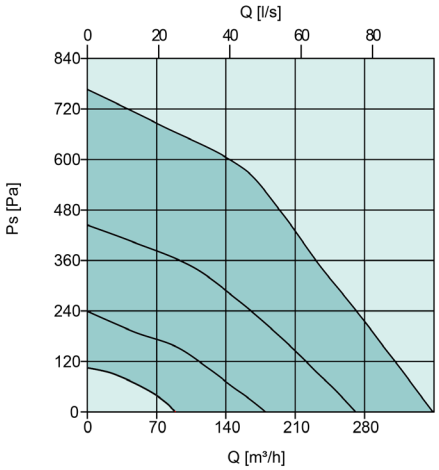

Scheme

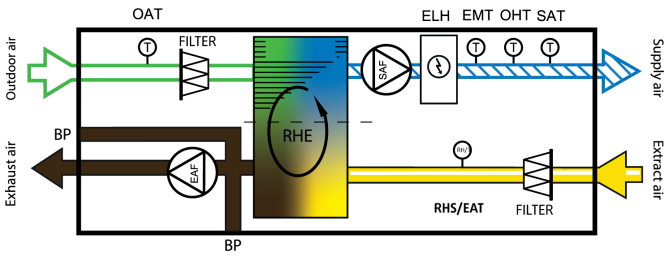

SAF	Supply fan
EAF	Extract fan
FILTER	Extract/Supply filter
OAT	Outdoor air temp. sensor
SAT	Supply air temp. sensor
RHS/EAT	Relative humidity sensor/Extract air temp. sensor
ELH	Electric heater
OHT	Overheating thermostat
EMT	Emergency thermostat
BP	Bypass cooker hood
RHE	Rotating Heat Exchanger

Dimensions

SAVE VSR 200/B

* Cooker hood connection

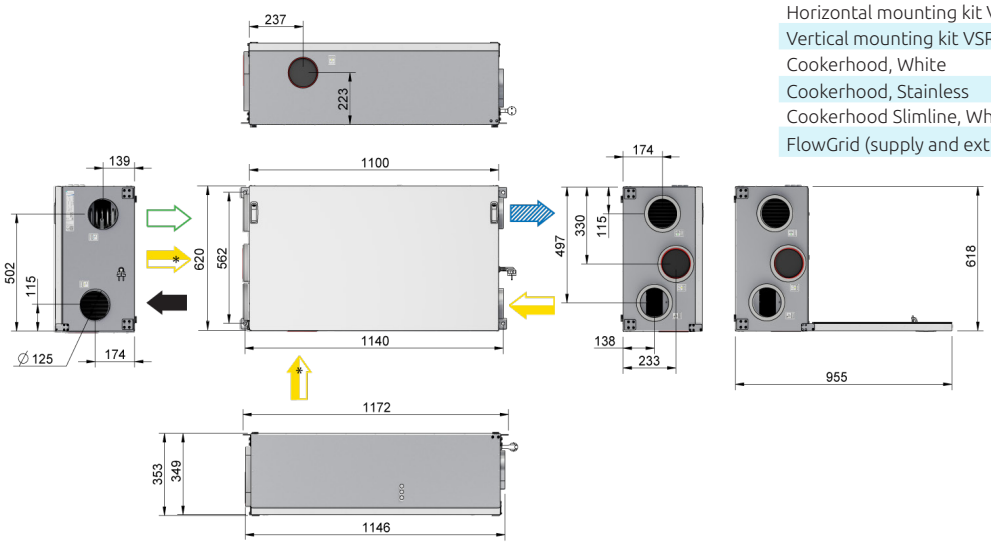

Accessories

Accessories SAVE VSR 200/B		Art. no.
Controls		
SAVE TOUCH White	Touch display white	138077
SAVE TOUCH Black	Touch display black	138078
SAVE LIGHT White	SAVE Light White	319118
SAVE LIGHT Black	SAVE Light Black	319119
SAVE Wall Mounted Kit	Control panel frame	140736
CEC Cable 12m	VK-12	24782
CEC Cable 6m	VK-6	24783
Diverting Plug	Diverting Plug	37367
Indoor Air Quality Wired		
Systemair-E CO2 sensor	T8100-E-SA-1000RTD	14904
Systemair-E CO2 + RH + Temperature	T8100-E-H-SA-10R	211522
Systemair-1 CO2 duct sensor	T8041	14906
Duct sensor NTC10K (-30-70C) 1,5 m	TG-K3/NTC10-01	211524
Room sensor NTC10K (0-50C)	TG-R5/NTC10-01	211525
Presence detector	-	6995
VAV/CAV conversion kit	-	140777
Heating / Cooling		
Duct Water heating battery 2 Rows	VBC 125-2	5457
Duct Water heating battery 3 Rows	VBC 125-3	9839
Surface sensor NTC10K (-30-150C) 1,5 m	TG-A1/NTC10-01	211523
Actuator 0-10V	RVAZ4 24A	9862
2-Way-Valve	ZTV 15-0,4	9829
2-Way-Valve	ZTV 15-0,6	6571
3-Way-Valve	ZTR 15-0,4	9670
3-Way-Valve	ZTR 15-0,6	6573
Electrical Duct Heater	CB 125-0,6 230V/1	5289
Electrical Duct Heater	CB 125-1,2 230V/1	5290
Electrical Duct Heater	CB 125-1,8 230V/1	5377
Preheater KIT 230V	1-Phase kit	142852
Duct Cooler	CWK 125-3-2,5	30021
Filters		
PF VSR 200 STD kit	F7/ePM1 60% Supply M5/ePM10 50% Extract	331831
PF VSR 200 OPT kit	F8/ePM1 70% Supply M5/ePM10 50% Extract	331832
Other		
Combi grille 125, White	CVVX 125, white	26422
Combi grille 125, Black	CVVX 125, black	26421
Outdoor grille Ø125 White	-	477990
Outdoor grille Ø125 Black	-	486800
Outdoor grille Ø125 Magnelis	-	487400
Fast clamp 125	FK 125	1608
Connection duct D125/1,0 M/F	SCD Flexible Silencer	2556
Silencer	LDC 125-600	5190
Silencer	LDC 125-900	5191
Control damper	TUNE-R-125-3-M1	311938
Control damper (Spring)	TUNE-R-125-3-M4	311968
Relay mounting kit	RMK Kit Systemair	576801
Control damper	TUNE-R-125-3-M2	311948
Control damper (Spring)	TUNE-R-125-3-M5	311978
Transformer 24V	PSS20 24V	202692
Iris Damper	SPI-125 C	6751
Pressure guard with pitot tube	DPR200T	212987
Horizontal mounting kit VSR200	-	398258
Vertical mounting kit VSR200	-	398259
Cookerhood, White	MONOLIT - B White	326800
Cookerhood, Stainless	MONOLIT - B S.Steel	326801
Cookerhood Slimline, White	392-10/B Slimline White	77265
FlowGrid (supply and extract air fan)	FlowGrid 190 mm kit	151642

Supply
Exhaust
Fresh air/supply
Extract

SAVE VSR 300

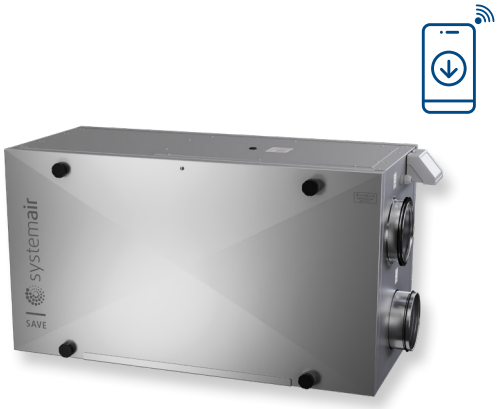

SAVE VSR 300 is a side connected unit with high efficiency stepless rotary heat exchanger. Designed for installation in the loft or in the ceiling in premises with a ventilated area of up to approx. 240 m².

VSR 300 is galvanized, double skinned, fully insulated and comes with complete control functionality. The unit accurately controls the speed of the heat exchanger after the need of heat/cooling recovery using the step less rotor motor.

SAVE CONNECT internet access module is delivered as standard with all units for remote control via mobile APP.

SAVE PRO web application for own or client device remote monitoring, control and troubleshooting.

Download SAVE CONNECT app via Google Play or Apple store.

- High efficiency rotating heat exchanger with variable speed drive and high performance EC fans
- Inspection hatch on both sides
- Demand ventilation control is standard with the built in humidity sensor
- Built in electrical re-heater
- Selection of different control panels available:
  - SAVE TOUCH for full functionality
  - SAVE LIGHT for basic functionality
- Connection board for easy access
- Modbus communication RS-485 as standard

Mid-frequency band, Hz									
LwA dB(A)	**Tot**	63	125	250	500	1k	2k	4k	8k
Supply air	**63**	71	67	67	59	55	54	47	40
Extract air	**53**	65	55	59	50	40	35	25	23
Surrounding	**42**	47	47	48	39	33	29	21	26

The sound data table indicates the sound power level LwA, which should not be confused with the sound pressure level LpA (based on the operation point 71 l/s at 50 Pa).

Technical data SAVE VSR 300		
Art. no.		488802
Energy efficiency class		
Standard unit		A
Standard unit with accessories*		A
Voltage/Frequency	V/50Hz	230
Power rating per fan	W	36
at example duty point:		71 l/s at 50 Pa
		257 m3/h at 50 Pa
SFP	kW/m³/s	1,02
Efficiency according EN 13141-7		85%
Fuse	A	10
Electrical re-heater power	W	1670
Input power, fan motor	W	2 x 83
Filter, supply air		
Pleat filter (PF)		F7/ePM1 60%
Filter, extract air		
Pleat filter (PF)		M5/ePM10 50%
Weight	kg	65

* With Indoor Air Quality accessories

SFP = Specific Fan Power (kW/m³/s)
The SFP value stated applies to the complete unit.

Performance data

Supply air

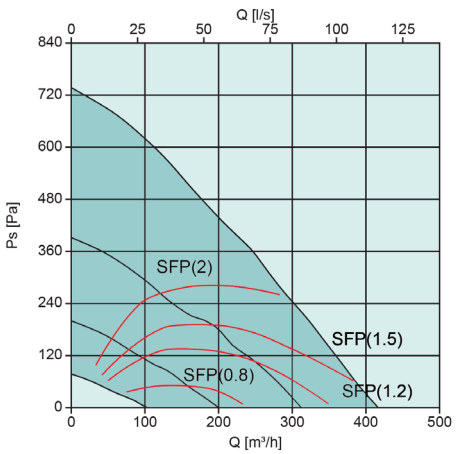

Extract air

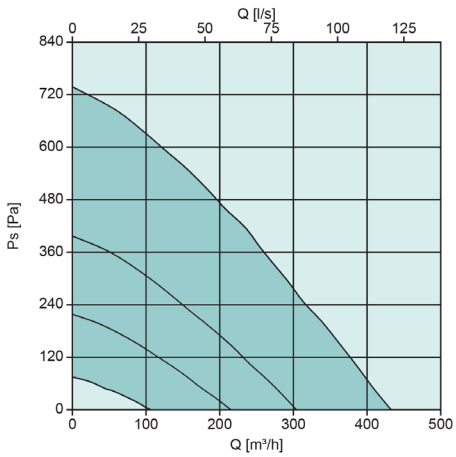

Scheme

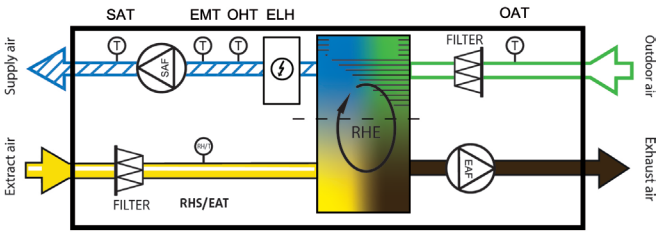

SAF	Supply fan
EAF	Extract fan
FILTER	Extract/Supply filter
OAT	Outdoor air temp. sensor
SAT	Supply air temp. sensor
RHS/EAT	Relative humidity sensor/Extract air temp. sensor
ELH	Electric heater
OHT	Overheating thermostat
EMT	Emergency thermostat
BP	Bypass cooker hood
RHE	Rotating Heat Exchanger

Dimensions

SAVE VSR 300

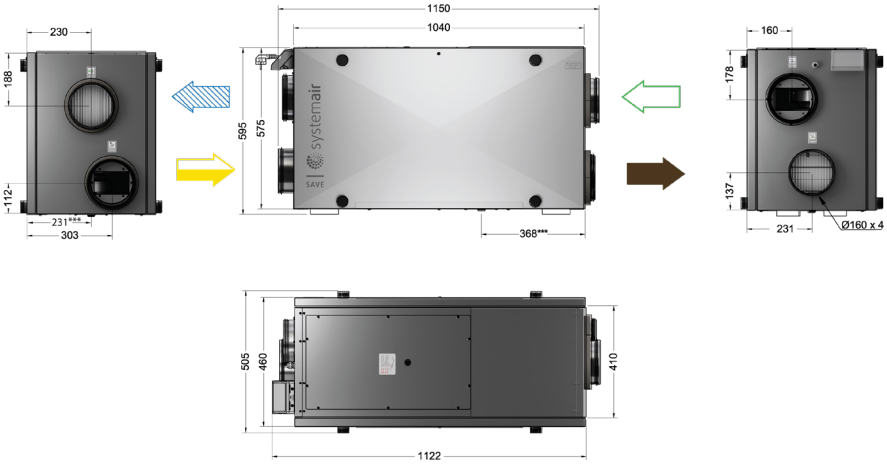

Accessories

Accessories SAVE VSR 300		Art. no.
Controls		
SAVE TOUCH White	Touch display white	138077
SAVE TOUCH Black	Touch display black	138078
SAVE LIGHT White	SAVE Light White	319118
SAVE LIGHT Black	SAVE Light Black	319119
SAVE Wall Mounted Kit	Control panel frame	140736
CEC Cable 12m	VK-12	24782
CEC Cable 6m	VK-6	24783
Diverting Plug	Diverting Plug	37367
Indoor Air Quality Wired		
Systemair-E CO2 sensor	T8100-E-SA-1000RTD	14904
Systemair-E CO2 + RH + Temperature	T8100-E-H-SA-10R	211522
Systemair-1 CO2 duct sensor	T8041	14906
Duct sensor NTC10K (-30-70C) 1,5 m	TG-K3/NTC10-01	211524
Room sensor NTC10K (0-50C)	TG-R5/NTC10-01	211525
Presence detector	-	6995
VAV/CAV conversion kit	-	140777
Heating / Cooling		
Duct Water heating battery 2 Rows	VBC 160-2	5458
Duct Water heating battery 3 Rows	VBC 160-3	9840
Surface sensor NTC10K (-30-150C) 1,5 m	TG-A1/NTC10-01	211523
Actuator 0-10V	RVAZ4 24A	9862
2-Way-Valve	ZTV 15-0,4	9829
2-Way-Valve	ZTV 15-0,6	6571
3-Way-Valve	ZTR 15-0,4	9670
3-Way-Valve	ZTR 15-0,6	6573
Electrical Duct Heater	CB 160-1,2 230V/1	5291
Electrical Duct Heater	CB 160-2,1 230V/1	5292
Electrical Duct Heater	CB 160-2,7 230V/1	5382
Preheater KIT 230V	1-Phase kit	142852
Duct Cooler	CWK 160-3-2,5	30022
Filters		
PF VSR 300 STD kit	F7/ePM1 60% Supply M5/ePM10 50% Extract	25211
PF VSR 300 OPT kit 1	F8/ePM1 70% Supply M5/ePM10 50% Extract	317691
Other		
Combi grille 160, White	CVVX 160, white	25396
Combi grille 160, Black	CVVX 160, black	25394
Outdoor grille Ø160 White	-	466900
Outdoor grille Ø160 Black	-	486900
Outdoor grille Ø160 Magnelis	-	487500
Fast clamp 160	FK 160	1610
Connection duct D160/1,0 M/F	SCD Flexible Silencer	2558
Silencer	LDC 160-600	5192
Silencer	LDC 160-900	5193
Control damper	TUNE-R-160-3-M1	311939
Control damper (Spring)	TUNE-R-160-3-M4	311969
Relay mounting kit	RMK Kit Systemair	576801
Control damper	TUNE-R-160-3-M2	311949
Control damper (Spring)	TUNE-R-160-3-M5	311979
Transformer 24V	PSS20 24V	202692
Iris Damper	SPI-160 C	6753
Pressure guard with pitot tube	DPR200T	212987
Ceiling mounting kit VSR 300	-	131610
Drainage kit	Drain pipe kit	146077

Supply
Exhaust
Fresh air/supply
Extract

*** Drainage connection

SAVE VSR 400

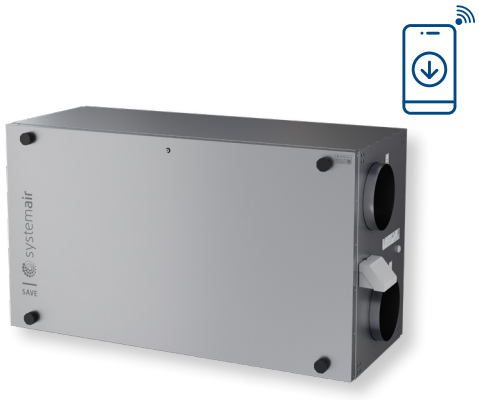

SAVE VSR 400 is a side connected unit with high efficiency stepless rotary heat exchanger. Designed for installation in the loft or in the ceiling in premises with a ventilated area of up to approx. 350 m².

VSR 400 is galvanized, double skinned, fully insulated and comes with complete control functionality. The unit accurately controls the speed of the heat exchanger after the need of heat/cooling recovery using the step less rotor motor.

SAVE CONNECT internet access module is delivered as standard with all units for remote control via mobile APP.

SAVE PRO web application for own or client device remote monitoring, control and troubleshooting.

Download SAVE CONNECT app via Google Play or Apple store.

- High efficiency rotating heat exchanger with variable speed drive and high performance EC fans
- Inspection hatch on both sides
- Demand ventilation control is standard with the built in humidity sensor
- Built in electrical re-heater
- Selection of different control panels available:
  - SAVE TOUCH for full functionality
  - SAVE LIGHT for basic functionality
- Connection board for easy access
- Modbus communication RS-485 as standard

Mid-frequency band, Hz									
LwA dB(A)	**Tot**	63	125	250	500	1k	2k	4k	8k
Supply air	**68**	83	69	69	68	58	59	56	48
Extract air	**62**	71	63	67	61	47	44	36	27
Surrounding	**45**	58	48	50	42	33	28	26	24

The sound data table indicates the sound power level LwA, which should not be confused with the sound pressure level LpA (based on the operation point - 119 l/s at 50 Pa).

Technical data SAVE VSR 400		
Art. no.		488881
Energy efficiency class		
Standard unit		A
Standard unit with accessories*		A
Voltage/Frequency	V/50 Hz	230
Power rating per fan	W	72
at example duty point:		119 l/s at 50 Pa
		430 m³/h at 50 Pa
SFP	kW/m³/s	1,21
Efficiency according EN 13141-7		83%
Fuse	A	13
Electrical re-heater power	W	1670
Input power, fan motor	W	2 x 169
Filter, supply air		
Pleat filter (PF)		F7/ePM1 60%
Filter, extract air		
Pleat filter (PF)		M5/ePM10 50%
Weight	kg	80

* With Indoor Air Quality accessories

SFP = Specific Fan Power (kW/m³/s)
The SFP value stated applies to the complete unit.

Performance data

Supply air

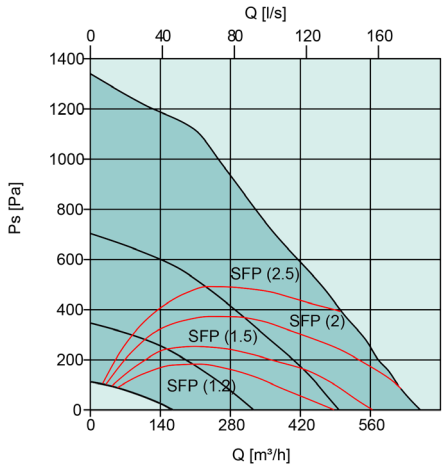

Extract air

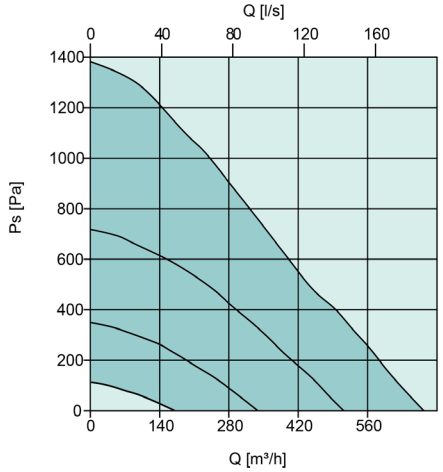

Scheme

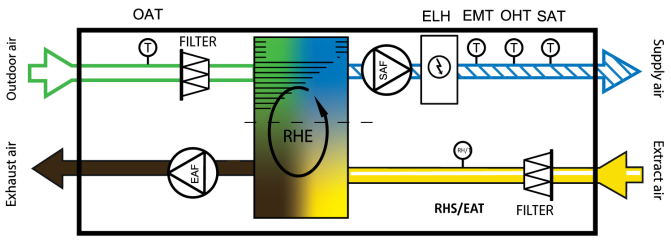

SAF	Supply fan
EAF	Extract fan
FILTER	Extract/Supply filter
OAT	Outdoor air temp. sensor
SAT	Supply air temp. sensor
RHS/EAT	Relative humidity sensor/Extract air temp. sensor
ELH	Electric heater
OHT	Overheating thermostat
EMT	Emergency thermostat
RHE	Rotating Heat Exchanger

Dimensions

SAVE VSR 400

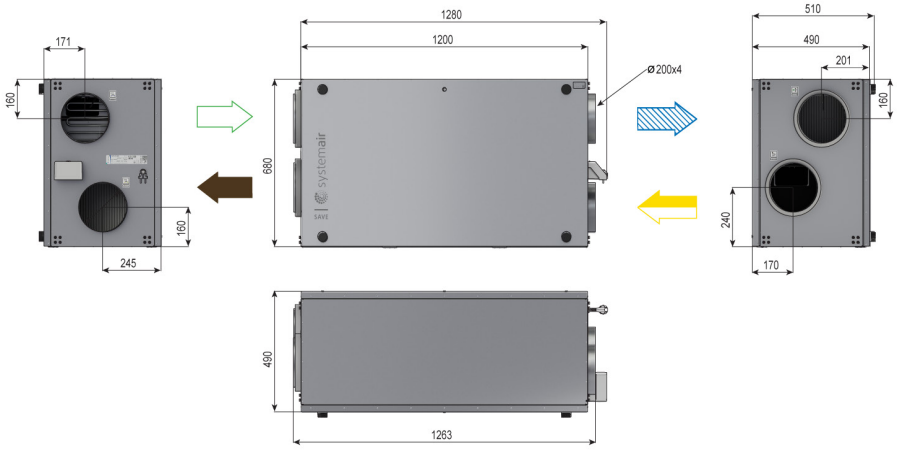

Accessories

Accessories SAVE VSR 400		Art. no.
Controls		
SAVE TOUCH White	Touch display white	138077
SAVE TOUCH Black	Touch display black	138078
SAVE LIGHT White	SAVE Light White	319118
SAVE LIGHT Black	SAVE Light Black	319119
SAVE Wall Mounted Kit	Control panel frame	140736
CEC Cable 12m	VK-12	24782
CEC Cable 6m	VK-6	24783
Diverting Plug	Diverting Plug	37367
Indoor Air Quality Wired		
Systemair-E CO2 sensor	T8100-E-SA-1000RTD	14904
Systemair-E CO2 + RH + Temperature	T8100-E-H-SA-10R	211522
Systemair-1 CO2 duct sensor	T8041	14906
Duct sensor NTC10K (-30-70C) 1,5 m	TG-K3/NTC10-01	211524
Room sensor NTC10K (0-50C)	TG-R5/NTC10-01	211525
Presence detector	-	6995
VAV/CAV conversion kit	-	140777
Heating / Cooling		
Duct Water heating battery 2 Rows	VBC 200-2	5459
Duct Water heating battery 3 Rows	VBC 200-3	9841
Surface sensor NTC10K (-30-150C) 1,5 m	TG-A1/NTC10-01	211523
Actuator 0-10V	RVAZ4 24A	9862
2-Way-Valve	ZTV 15-0,6	6571
2-Way-Valve	ZTV 15-1,0	9823
3-Way-Valve	ZTR 15-0,6	6573
3-Way-Valve	ZTR 15-1,0	9672
Electrical Duct Heater	CB 200-2,1 230V/1	5384
Preheater KIT 230V	1-Phase kit	142852
Duct Cooler	CWK 200-3-2,5	30023
Filters		
PF VSR 400 STD kit	F7/ePM1 60% Supply M5/ePM10 50% Extract	398188
PF VSR 400 OPT kit	F8/ePM1 70% Supply M5/ePM10 50% Extract	398189
Other		
Combi grille 200, White	CVVX 200, white	25397
Combi grille 200, Black	CVVX 200, black	25395
Outdoor grille Ø200 White	-	478090
Outdoor grille Ø200 Black	-	487100
Outdoor grille Ø200 Magnelis	-	487600
Fast clamp 200	FK 200	1611
Connection duct D200/1,0 M/F	SCD Flexible Silencer	2560
Silencer	LDC 200-600	5194
Silencer	LDC 200-900	5195
Control damper	TUNE-R-200-3-M1	311940
Control damper (Spring)	TUNE-R-200-3-M4	311970
Relay mounting kit	RMK Kit Systemair	576801
Control damper	TUNE-R-200-3-M2	311950
Control damper (Spring)	TUNE-R-200-3-M5	311980
Transformer 24V	PSS20 24V	202692
Iris Damper	SPI-200 C	6754
Pressure guard with pitot tube	DPR200T	212987
Ceiling mounting kit VSR 400	-	455699
Horizontal mounting kit VSR 400	-	455799
Vertical mounting kit VSR 400	-	455899

Supply
Exhaust
Fresh air/supply
Extract

SAVE VSR 500

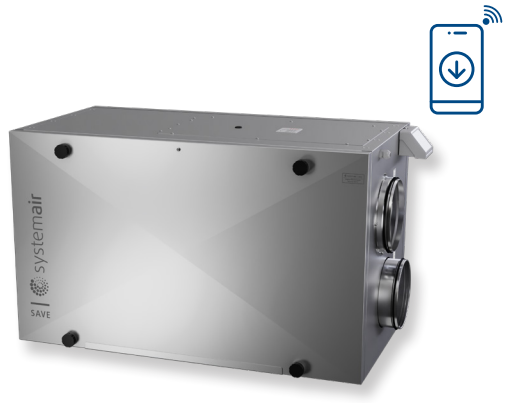

SAVE VSR 500 is a side connected unit with high efficiency stepless rotary heat exchanger. Designed for installation in the loft or in the ceiling in premises with a ventilated area of up to approx. 400 m².

VSR 500 is galvanized, double skinned, fully insulated and comes with complete control functionality. The unit accurately controls the speed of the heat exchanger after the need of heat/cooling recovery using the step less rotor motor.

SAVE CONNECT internet access module is delivered as standard with all units for remote control via mobile APP.

SAVE PRO web application for own or client device remote monitoring, control and troubleshooting.

Download SAVE CONNECT app via Google Play or Apple store.

- High efficiency rotating heat exchanger with variable speed drive and high performance EC fans
- Inspection hatch on both sides
- Demand ventilation control is standard with the built in humidity sensor
- Built in electrical re-heater
- Selection of different control panels available:
  - SAVE TOUCH for full functionality
  - SAVE LIGHT for basic functionality
- Connection board for easy access
- Modbus communication RS-485 as standard

Mid-frequency band, Hz									
LwA dB(A)	**Tot**	63	125	250	500	1k	2k	4k	8k
Supply air	**70**	78	71	69	67	64	64	59	56
Extract air	**66**	68	61	71	63	52	47	38	30
Surrounding	**53**	49	52	58	52	42	37	28	27

The sound data table indicates the sound power level LwA, which should not be confused with the sound pressure level LpA (based on the operation point - 118 l/s at 50 Pa).

Technical data SAVE VSR 500		
Art. no.		488804
Energy efficiency class		
Standard unit		A
Standard unit with accessories*		A
Voltage/Frequency	V/50Hz	230
Power rating per fan	W	70
at example duty point:		118 l/s at 50 Pa
		426 m³/h at 50 Pa
SFP	kW/m³/s	1,15
Efficiency according EN 13141-7		84%
Fuse	A	13
Electrical re-heater power	W	1670
Input power, fan motor	W	2 x 169
Filter, supply air		
Pleat filter (PF)		F7/ePM1 60%
Filter, extract air		
Pleat filter (PF)		M5/ePM10 50%
Weight	kg	77

* With Indoor Air Quality accessories

SFP = Specific Fan Power (kW/m³/s)
The SFP value stated applies to the complete unit.

Performance data

Supply air

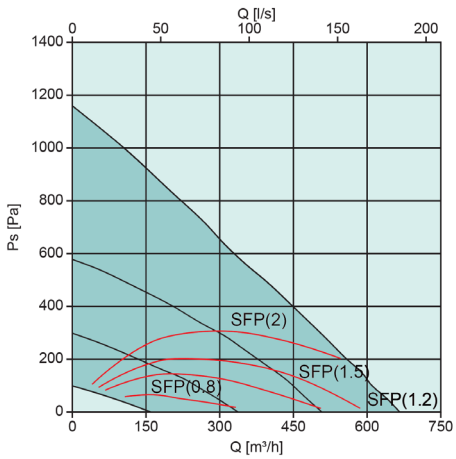

Extract air

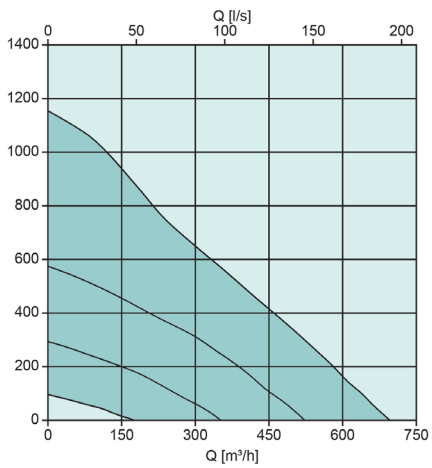

Scheme

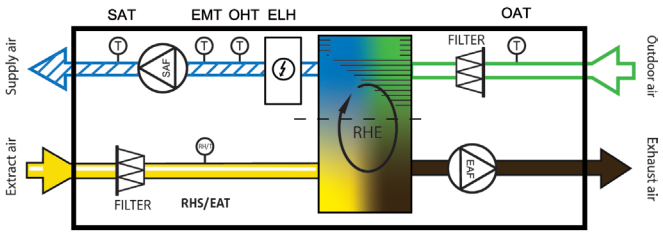

SAF	Supply fan
EAF	Extract fan
FILTER	Extract/Supply filter
OAT	Outdoor air temp. sensor
SAT	Supply air temp. sensor
RHS/EAT	Relative humidity sensor/Extract air temp. sensor
ELH	Electric heater
OHT	Overheating thermostat
EMT	Emergency thermostat
RHE	Rotating Heat Exchanger

Dimensions

SAVE VSR 500

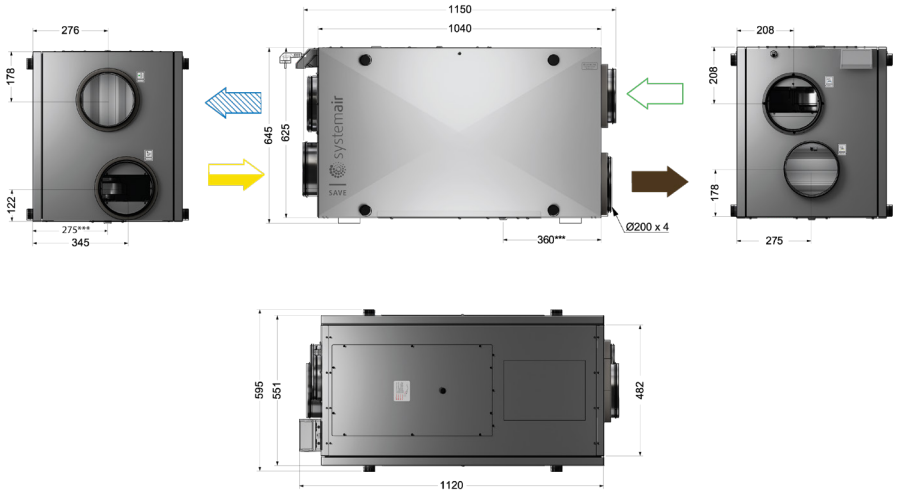

Supply
Exhaust
Fresh air/supply
Extract

*** Drainage connection

Accessories

Accessories SAVE VSR 500		Art. no.
Controls		
SAVE TOUCH White	Touch display white	138077
SAVE TOUCH Black	Touch display black	138078
SAVE LIGHT White	SAVE Light White	319118
SAVE LIGHT Black	SAVE Light Black	319119
SAVE Wall Mounted Kit	Control panel frame	140736
CEC Cable 12m	VK-12	24782
CEC Cable 6m	VK-6	24783
Diverting Plug	Diverting Plug	37367
Indoor Air Quality Wired		
Systemair-E CO2 sensor	T8100-E-SA-1000RTD	14904
Systemair-E CO2 + RH + Temperature	T8100-E-H-SA-10R	211522
Systemair-1 CO2 duct sensor	T8041	14906
Duct sensor NTC10K (-30-70C) 1,5 m	TG-K3/NTC10-01	211524
Room sensor NTC10K (0-50C)	TG-R5/NTC10-01	211525
Presence detector	-	6995
VAV/CAV conversion kit	-	140777
Heating / Cooling		
Duct Water heating battery 2 Rows	VBC 200-2	5459
Duct Water heating battery 3 Rows	VBC 200-3	9841
Surface sensor NTC10K (-30-150C) 1,5m	TG-A1/NTC10-01	211523
Actuator 0-10V	RVAZ4 24A	9862
2-Way-Valve	ZTV 15-0,6	6571
2-Way-Valve	ZTV 15-1,0	9823
3-Way-Valve	ZTR 15-0,6	6573
3-Way-Valve	ZTR 15-1,0	9672
Electrical Duct Heater	CB 200-2,1 230V/1	5384
Preheater KIT 230V	1-Phase kit	142852
Duct Cooler	CWK 200-3-2,5	30023
Filters		
PF VSR 500 STD kit	F7/ePM1 60% Supply M5/ePM10 50% Extract	25212
PF VSR 500 OPT kit	F8/ePM1 70% Supply M5/ePM10 50% Extract	317693
Other		
Combi grille 200, White	CVVX 200, white	25397
Combi grille 200, Black	CVVX 200, black	25395
Outdoor grille Ø200 White	-	478090
Outdoor grille Ø200 Black	-	487100
Outdoor grille Ø200 Magnelis	-	487600
Fast clamp 200	FK 200	1611
Connection duct D200/1,0 M/F	SCD Flexible Silencer	2560
Silencer	LDC 200-600	5194
Silencer	LDC 200-900	5195
Control damper	TUNE-R-200-3-M1	311940
Control damper (Spring)	TUNE-R-200-3-M4	311970
Relay mounting kit	RMK Kit Systemair	576801
Control damper	TUNE-R-200-3-M2	311950
Control damper (Spring)	TUNE-R-200-3-M5	311980
Transformer 24V	PSS20 24V	202692
Iris Damper	SPI-200 C	6754
Pressure guard with pitot tube	DPR200T	212987
Ceiling mounting kit VSR 500	-	131620
Drainage kit	Drain pipe kit	146077

SAVE VSR 700



SAVE VSR 700 is a side connected unit with high efficiency stepless rotary heat exchanger. Designed for installation on the floor in premises with a ventilated area of up to approx. 500 m².

VSR 700 is galvanized, double skinned, fully insulated and comes with complete control functionality. The unit accurately controls the speed of the heat exchanger after the need of heat/cooling recovery using the step less rotor motor.

SAVE CONNECT internet access module is delivered as standard with all units for remote control via mobile APP.

SAVE PRO web application for own or client device remote monitoring, control and troubleshooting.

Download SAVE CONNECT app via Google Play or Apple store.

- High efficiency rotating heat exchanger with variable speed drive and high performance EC fans
- Inspection hatch on both sides
- Demand ventilation control is standard with the built in humidity sensor
- Built in electrical re-heater
- Selection of different control panels available:
  - SAVE TOUCH for full functionality
  - SAVE LIGHT for basic functionality
- Connection board for easy access
- Modbus communication RS-485 as standard

Technical data SAVE VSR 700		
Art. no.		488866
Energy efficiency class Standard unit Standard unit with accessories*		 A A+
Voltage/Frequency	V/50Hz	230
Power rating per fan at example duty point:	W	69 169 l/s at 50 Pa 609 m3/h at 50 Pa
SFP	kW/m³/s	0,81
Efficiency according EN 13141-7		83%
Fuse	A	10
Electrical re-heater power	W	1670
Input power, fan motor	W	2 x 170
Filter, supply air		
Pleat filter (PF)		F7/ePM1 60%
Filter, extract air		
Pleat filter (PF)		M5/ePM10 50%
Weight	kg	120

* With Indoor Air Quality accessories

Mid-frequency band, Hz									
LwA dB(A)	**Tot**	63	125	250	500	1k	2k	4k	8k
Supply air	**63**	74	66	66	60	55	54	47	37
Extract air	**58**	65	61	67	51	43	36	26	24
Surrounding	**44**	55	49	52	38	31	26	21	22

The sound data table indicates the sound power level LwA, which should not be confused with the sound pressure level LpA (based on the operation point - 169 l/s at 50 Pa).

SFP = Specific Fan Power (kW/m³/s)
The SFP value stated applies to the complete unit.

Performance data

Supply air

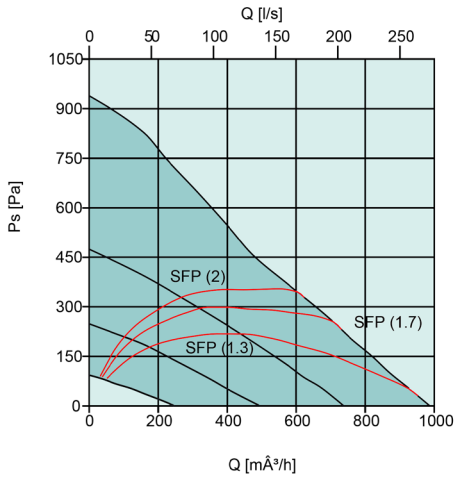

Extract air

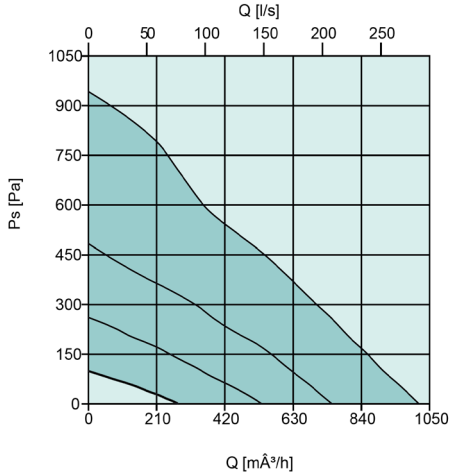

Scheme

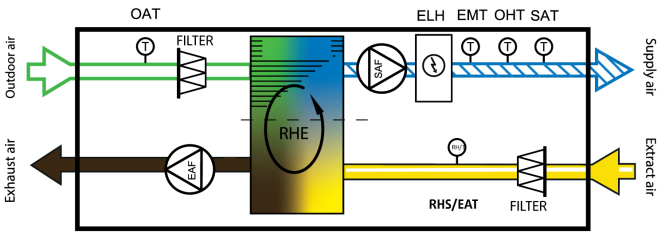

SAF	Supply fan
EAF	Extract fan
FILTER	Extract/Supply filter
OAT	Outdoor air temp. sensor
SAT	Supply air temp. sensor
RHS/EAT	Relative humidity sensor/Extract air temp. sensor
ELH	Electric heater
OHT	Overheating thermostat
EMT	Emergency thermostat
RHE	Rotating Heat Exchanger

Dimensions

SAVE VSR 700

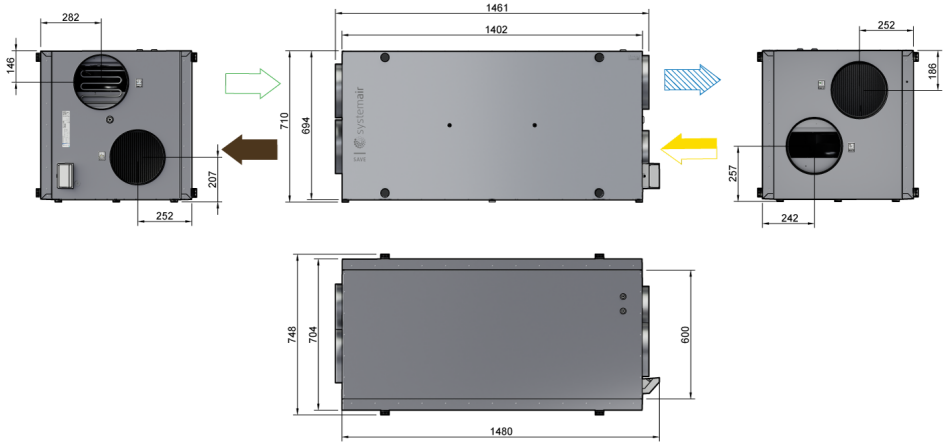

Accessories

Accessories SAVE VSR 700		Art. no.
Controls		
SAVE TOUCH White	Touch display white	138077
SAVE TOUCH Black	Touch display black	138078
SAVE LIGHT White	SAVE Light White	319118
SAVE LIGHT Black	SAVE Light Black	319119
SAVE Wall Mounted Kit	Control panel frame	140736
CEC Cable 12m	VK-12	24782
CEC Cable 6m	VK-6	24783
Diverting Plug	Diverting Plug	37367
Indoor Air Quality Wired		
Systemair-E CO2 sensor	T8100-E-SA-1000RTD	14904
Systemair-E CO2 + RH + Temperature	T8100-E-H-SA-10R	211522
Systemair-1 CO2 duct sensor	T8041	14906
Duct sensor NTC10K (-30-70C) 1,5 m	TG-K3/NTC10-01	211524
Room sensor NTC10K (0-50C)	TG-R5/NTC10-01	211525
Presence detector	-	6995
VAV/CAV conversion kit	-	140777
CAV kit		161100
Heating / Cooling		
Water coil VSR 700	WH VSR 700	462101
Duct Water heating battery 2 Rows	VBC 250-2	5460
Duct Water heating battery 3 Rows	VBC 250-3	9843
Surface sensor NTC10K (-30-150C) 1,5 m	TG-A1/NTC10-01	211523
Actuator 0-10V	RVAZ4 24A	9862
2-Way-Valve	ZTV 15-1,6	9824
3-Way-Valve	ZTR 15-1,6	9673
Electrical Duct Heater	CB 250-3,0 230V/1	5385
Preheater KIT 230V	1-Phase kit	142852
Electrical Duct Heater	CB 250-6,0 400V/2	5372
Electrical Duct Heater	CB 250-9,0 400V/3	5373
Preheater KIT 400V	2/3-Phase kit	151612
Duct Cooler	CWK 250-3-2,5	30024
Filters		
PF VSR 700 STD kit	F7/ePM1 60% Supply M5/ePM10 50% Extract	454339
PF VSR 700 OPT kit	F8/ePM1 70% Supply M5/ePM10 50% Extract	454340
Other		
Combi grille 250, White	CVVX 250, white	146260
Combi grille 250, Black	CVVX 250, black	8498
Outdoor grille Ø250 White	-	476250
Outdoor grille Ø250 Black	-	487200
Outdoor grille Ø250 Magnelis	-	487700
Fast clamp 250	FK 250	1612
Connection duct D250/1,0 M/F	SCD Flexible Silencer	2561
Silencer	LDC 250-900	5196
Damper + Motor	EFD 250 + TF230	6748
Control damper	TUNE-R-250-3-M1	311941
Control damper (Spring)	TUNE-R-250-3-M4	311971
Relay mounting kit	RMK Kit Systemair	576801
Control damper	TUNE-R-250-3-M2	311951
Control damper (Spring)	TUNE-R-250-3-M5	311981
Transformer 24V	PSS20 24V	202692
Iris Damper	SPI-250 C	6755
Pressure guard with pitot tube	DPR200T	212987

SAVE VSR 700 Ceiling

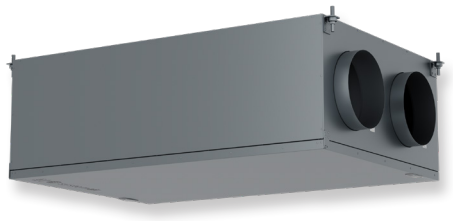

SAVE VSR 700 Ceiling is a side connected unit with high efficiency stepless rotary heat exchanger. Designed for installation on the floor in premises with a ventilated area of up to approx. 700 m².

VSR 700 Ceiling is zinc-magnesium coated, double skinned, fully insulated and comes with complete control functionality. The unit accurately controls the speed of the heat exchanger after the need of heat/cooling recovery using the step less rotor motor.

SAVE CONNECT internet access module is delivered as standard with all units for remote control via mobile APP.

SAVE PRO web application for own or client device remote monitoring, control and troubleshooting.

Download SAVE CONNECT app via Google Play or Apple store.

- High efficiency rotating heat exchanger with variable speed drive and high performance EC fans
- Demand ventilation control is standard with the built in humidity sensor
- Built in electrical re-heater
- Selection of different control panels available:
  - SAVE TOUCH for full functionality
  - SAVE LIGHT for basic functionality
- Connection board for easy access
- Modbus communication RS-485 as standard

Mid-frequency band, Hz									
LwA dB(A)	**Tot**	63	125	250	500	1k	2k	4k	8k
Supply air	**72**	83	77	75	71	63	63	57	53
Extract air	**65**	78	74	70	62	52	50	43	33
Surrounding	**53**	64	60	54	54	40	42	37	32

The sound data table indicates the sound power level LwA, which should not be confused with the sound pressure level LpA (based on the operation point - 194l/s at 50 Pa).

Technical data SAVE VSR 700 Ceiling		
Art. no.		574000
Energy efficiency class		
Standard unit		A
Standard unit with accessories*		A+
Voltage/Frequency	V/50Hz	230
Power rating per fan	W	125
at example duty point:		194 l/s at 50 Pa
		697 m3/h at 50 Pa
SFP	kW/m³/s	1,3
Efficiency according EN 13141-7		84%
Fuse	A	10
Electrical re-heater power	W	1670
Input power, fan motor	W	2 x 500
Filter, supply air		
Pleat filter (PF)		F7/ePM1 60%
Filter, extract air		
Pleat filter (PF)		M5/ePM10 50%
Weight	kg	97

* With Indoor Air Quality accessories

SFP = Specific Fan Power (kW/m³/s)
The SFP value stated applies to the complete unit.

Performance data

Supply air

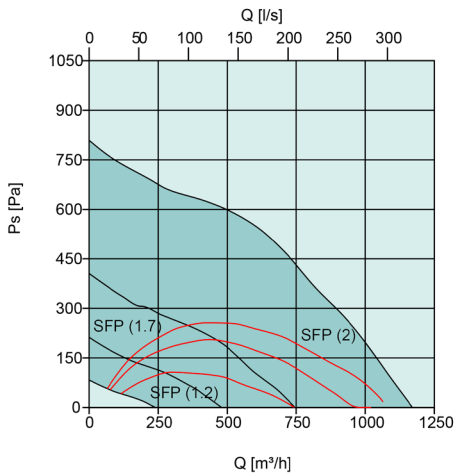

Extract air

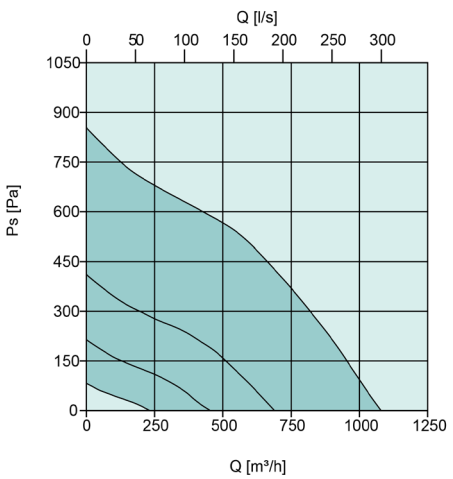

Scheme

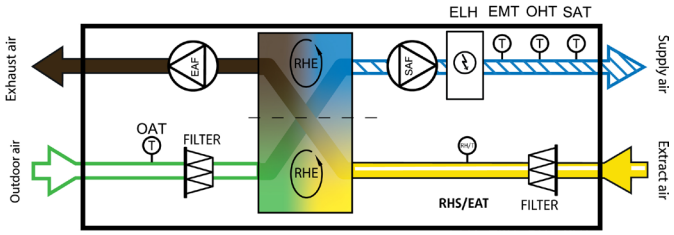

SAF	Supply fan
EAF	Extract fan
FILTER	Extract/Supply filter
OAT	Outdoor air temp. sensor
SAT	Supply air temp. sensor
RHS/EAT	Relative humidity sensor/Extract air temp. sensor
ELH	Electric heater
OHT	Overheating thermostat
EMT	Emergency thermostat
RHE	Rotating Heat Exchanger

Dimensions

SAVE VSR 700 Ceiling

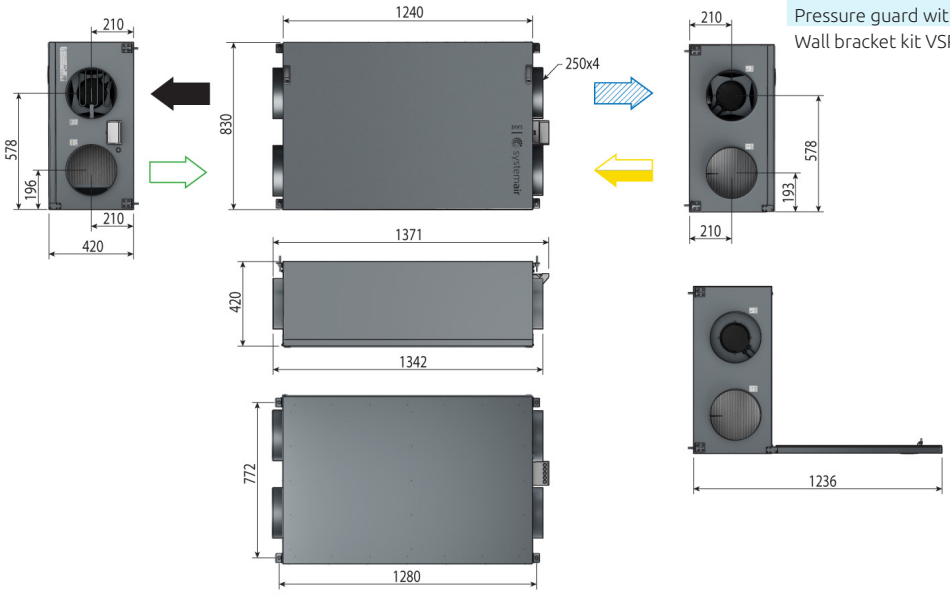

Accessories

Accessories SAVE VSR 700 Ceiling		Art. no.
Controls		
SAVE TOUCH White	Touch display white	138077
SAVE TOUCH Black	Touch display black	138078
SAVE LIGHT White	SAVE Light White	319118
SAVE LIGHT Black	SAVE Light Black	319119
SAVE Wall Mounted Kit	Control panel frame	140736
CEC Cable 12m	VK-12	24782
CEC Cable 6m	VK-6	24783
Diverting Plug	Diverting Plug	37367
Indoor Air Quality Wired		
Systemair-E CO2 sensor	T8100-E-SA-1000RTD	14904
Systemair-E CO2 + RH + Temperature	T8100-E-H-SA-10R	211522
Systemair-1 CO2 duct sensor	T8041	14906
Duct sensor NTC10K (-30-70C) 1,5 m	TG-K3/NTC10-01	211524
Room sensor NTC10K (0-50C)	TG-R5/NTC10-01	211525
Presence detector	-	6995
VAV/CAV conversion kit	-	140777
Heating / Cooling		
Duct Water heating battery 2 Rows	VBC 250-2	5460
Duct Water heating battery 3 Rows	VBC 250-3	9843
Surface sensor NTC10K (-30-150C) 1,5 m	TG-A1/NTC10-01	211523
Actuator 0-10V	RVAZ4 24A	9862
2-Way-Valve	ZTV 15-1,6	9824
3-Way-Valve	ZTR 15-1,6	9673
Electrical Duct Heater	CB 250-3,0 230V/1	5385
Preheater KIT 230V	1-Phase kit	142852
Electrical Duct Heater	CB 250-6,0 400V/2	5372
Electrical Duct Heater	CB 250-9,0 400V/3	5373
CB heater connection kit	2/3-Phase kit	151612
Duct Cooler	CWK 250-3-2,5	30024
Filters		
PF VSR 700 STD kit	F7/ePM1 60% Supply M5/ePM10 50% Extract	573094
PF VSR 700 OPT kit	F8/ePM1 70% Supply M5/ePM10 50% Extract	573095
Other		
Combi grille 250, White	CVVX 250, white	146260
Combi grille 250, Black	CVVX 250, black	8498
Outdoor grille Ø250 White	-	476250
Outdoor grille Ø250 Black	-	487200
Outdoor grille Ø250 Magnelis	-	487700
Fast clamp 250	FK 250	1612
Connection duct D250/1,0 M/F	SCD Flexible Silencer	2561
Silencer	LDC 250-900	5196
Damper + Motor	EFD 250 + TF230	6748
Control damper	TUNE-R-250-3-M1	311941
Control damper (Spring)	TUNE-R-250-3-M4	311971
Relay mounting kit	RMK Kit Systemair	576801
Control damper	TUNE-R-250-3-M2	311951
Control damper (Spring)	TUNE-R-250-3-M5	311981
Transformer 24V	PSS20 24V	202692
Iris Damper	SPI-250 C	6755
Pressure guard with pitot tube	DPR200T	212987
Wall bracket kit VSR700 C	-	627225


systemair