

Home Solutions by Systemair

SAVE Recent Launches in Unit Range

systemair

INSTALL

Installation examples



SAVE VTR 275/B





SAVE VSC 200



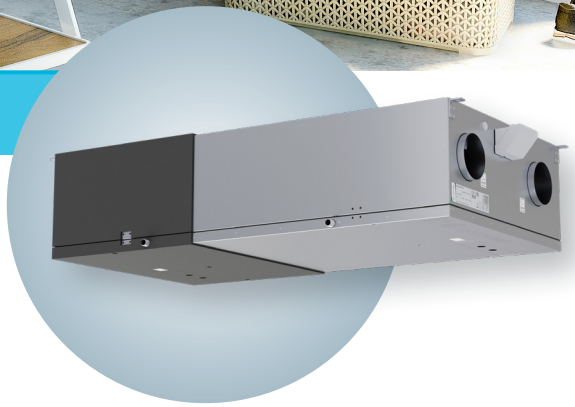

INSTALL

Installation examples





SAVE VSR 200/B


SAVE VTC 200 - 1

SAVE VSR 700 Ceiling

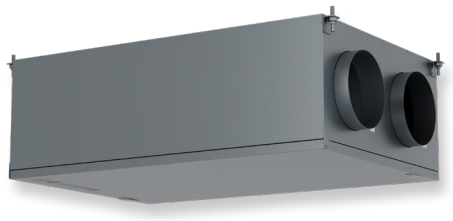

SAVE VSR 700 Ceiling is a side connected unit with high efficiency stepless rotary heat exchanger. Designed for installation on the floor in premises with a ventilated area of up to approx. 700 m².

VSR 700 Ceiling is zinc-magnesium coated, double skinned, fully insulated and comes with complete control functionality. The unit accurately controls the speed of the heat exchanger after the need of heat/cooling recovery using the step less rotor motor.

SAVE CONNECT internet access module is delivered as standard with all units for remote control via mobile APP.

SAVE PRO web application for own or client device remote monitoring, control and troubleshooting.

Download SAVE CONNECT app via Google Play or Apple store.

- High efficiency rotating heat exchanger with variable speed drive and high performance EC fans
- Demand ventilation control is standard with the built in humidity sensor
- Built in electrical re-heater
- Selection of different control panels available:
  - SAVE TOUCH for full functionality
  - SAVE LIGHT for basic functionality
- Connection board for easy access
- Modbus communication RS-485 as standard

Mid-frequency band, Hz									
LwA dB(A)	**Tot**	63	125	250	500	1k	2k	4k	8k
Supply air	**72**	83	77	75	71	63	63	57	53
Extract air	**65**	78	74	70	62	52	50	43	33
Surrounding	**53**	64	60	54	54	40	42	37	32

The sound data table indicates the sound power level LwA, which should not be confused with the sound pressure level LpA (based on the operation point - 194l/s at 50 Pa).

Technical data SAVE VSR 700 Ceiling		
Art. no.		574000
Energy efficiency class		
Standard unit		A
Standard unit with accessories*		A+
Voltage/Frequency	V/50Hz	230
Power rating per fan	W	125
at example duty point:		194 l/s at 50 Pa
		697 m3/h at 50 Pa
SFP	kW/m³/s	1,3
Efficiency according EN 13141-7		84%
Fuse	A	10
Electrical re-heater power	W	1670
Input power, fan motor	W	2 x 500
Filter, supply air		
Pleat filter (PF)		F7/ePM1 60%
Filter, extract air		
Pleat filter (PF)		M5/ePM10 50%
Weight	kg	97

* With Indoor Air Quality accessories

SFP = Specific Fan Power (kW/m³/s)
The SFP value stated applies to the complete unit.

Performance data

Supply air

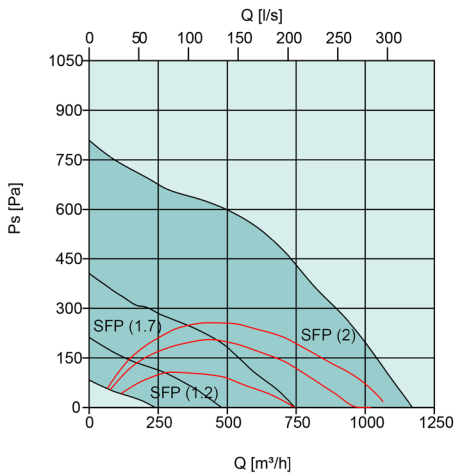

Extract air

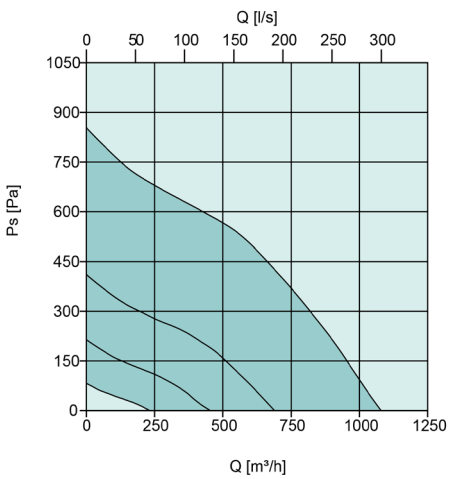

Scheme

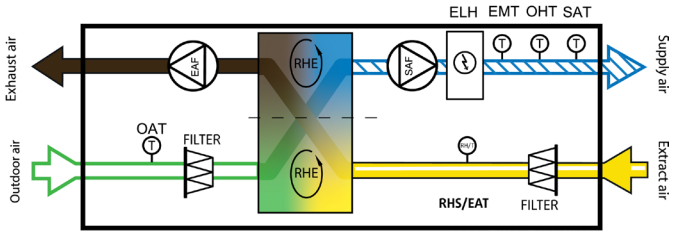

SAF	Supply fan
EAF	Extract fan
FILTER	Extract/Supply filter
OAT	Outdoor air temp. sensor
SAT	Supply air temp. sensor
RHS/EAT	Relative humidity sensor/Extract air temp. sensor
ELH	Electric heater
OHT	Overheating thermostat
EMT	Emergency thermostat
RHE	Rotating Heat Exchanger

Dimensions

SAVE VSR 700 Ceiling

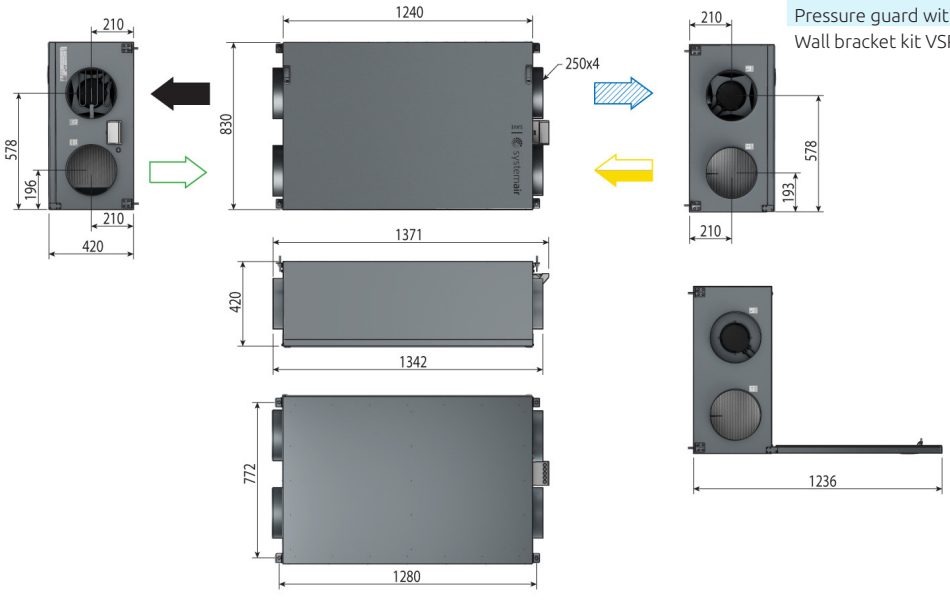

Accessories

Accessories SAVE VSR 700 Ceiling		Art. no.
Controls		
SAVE TOUCH White	Touch display white	138077
SAVE TOUCH Black	Touch display black	138078
SAVE LIGHT White	SAVE Light White	319118
SAVE LIGHT Black	SAVE Light Black	319119
SAVE Wall Mounted Kit	Control panel frame	140736
CEC Cable 12m	VK-12	24782
CEC Cable 6m	VK-6	24783
Diverting Plug	Diverting Plug	37367
Indoor Air Quality Wired		
Systemair-E CO2 sensor	T8100-E-SA-1000RTD	14904
Systemair-E CO2 + RH + Temperature	T8100-E-H-SA-10R	211522
Systemair-1 CO2 duct sensor	T8041	14906
Duct sensor NTC10K (-30-70C) 1,5 m	TG-K3/NTC10-01	211524
Room sensor NTC10K (0-50C)	TG-R5/NTC10-01	211525
Presence detector	-	6995
VAV/CAV conversion kit	-	140777
Heating / Cooling		
Duct Water heating battery 2 Rows	VBC 250-2	5460
Duct Water heating battery 3 Rows	VBC 250-3	9843
Surface sensor NTC10K (-30-150C) 1,5 m	TG-A1/NTC10-01	211523
Actuator 0-10V	RVAZ4 24A	9862
2-Way-Valve	ZTV 15-1,6	9824
3-Way-Valve	ZTR 15-1,6	9673
Electrical Duct Heater	CB 250-3,0 230V/1	5385
Preheater KIT 230V	1-Phase kit	142852
Electrical Duct Heater	CB 250-6,0 400V/2	5372
Electrical Duct Heater	CB 250-9,0 400V/3	5373
CB heater connection kit	2/3-Phase kit	151612
Duct Cooler	CWK 250-3-2,5	30024
Filters		
PF VSR 700 STD kit	F7/ePM1 60% Supply M5/ePM10 50% Extract	573094
PF VSR 700 OPT kit	F8/ePM1 70% Supply M5/ePM10 50% Extract	573095
Other		
Combi grille 250, White	CVVX 250, white	146260
Combi grille 250, Black	CVVX 250, black	8498
Outdoor grille Ø250 White	-	476250
Outdoor grille Ø250 Black	-	487200
Outdoor grille Ø250 Magnelis	-	487700
Fast clamp 250	FK 250	1612
Connection duct D250/1,0 M/F	SCD Flexible Silencer	2561
Silencer	LDC 250-900	5196
Damper + Motor	EFD 250 + TF230	6748
Control damper	TUNE-R-250-3-M1	311941
Control damper (Spring)	TUNE-R-250-3-M4	311971
Relay mounting kit	RMK Kit Systemair	576801
Control damper	TUNE-R-250-3-M2	311951
Control damper (Spring)	TUNE-R-250-3-M5	311981
Transformer 24V	PSS20 24V	202692
Iris Damper	SPI-250 C	6755
Pressure guard with pitot tube	DPR200T	212987
Wall bracket kit VSR700 C	-	627225



SAVE VTR 150/K



SAVE VTR 150/K is a top connected unit with an integrated cooker hood designed for installation in the kitchen above the hob, with high efficiency step less rotary heat exchanger. Adapted for ventilation of smaller houses and apartments with a ventilated area of up to 115 m². Energy efficiency class A is available together with external demand control accessory.

VTR 150/K is white painted or stainless, double skinned, fully insulated and comes with complete control functionality. The unit accurately controls the speed of the heat exchanger after the need of heat/cooling recovery using the step less rotor motor.

SAVE CONNECT internet access module is delivered as standard with all units for remote control via mobile APP.

SAVE PRO web application for own or client device remote monitoring, control and troubleshooting.

Download SAVE CONNECT app via Google Play or Apple store.

- High efficiency rotating heat exchanger with variable speed drive and high performance EC fans
- Modern design with integrated high quality kitchen hood
- Demand ventilation control is standard with the built in humidity sensor
- Built in electrical re-heater
- Selection of different control panels available:
  - SAVE TOUCH for full functionality
  - SAVE LIGHT for basic functionality
- Connection board for easy access
- Modbus communication RS-485 as standard

Mid-frequency band, Hz (SAVE VTR 150/K R)									
LwA dB(A)	**Tot**	63	125	250	500	1k	2k	4k	8k
Supply	**66**	78	71	69	64	59	57	51	47
Extract	**58**	71	62	66	53	41	33	21	21
Surrounding	**41**	51	43	48	37	29	27	21	23

Mid-frequency band, Hz (SAVE VTR 150/K L)									
LwA dB(A)	**Tot**	63	125	250	500	1k	2k	4k	8k
Supply	**68**	76	70	70	67	60	57	50	46
Extract	**60**	71	63	67	53	43	33	22	21
Surrounding	**43**	57	44	49	37	31	28	22	22

The sound data table indicates the sound power level LwA, which should not be confused with the sound pressure level LpA (based on the operation point - 54 l/s at 50 Pa).

Technical data SAVE VTR 150/K		Right	Left
Art. no. White, 500 W		488892	488893
Art. no. Stainless steel, 500 W		488896	488897
Art. no. White, 1000 W		488890	488891
Art. no. Stainless steel, 1000 W		488894	488895
Energy efficiency class			
Standard unit		A	A
Standard unit with accessories*		A	A
Voltage/Frequency	V/50 Hz	230	230
Power rating per fan	W	35	35
at example duty point:		50 l/s	54 l/s
		at 50 Pa	at 50 Pa
		181 m³/h	195 m³/h
		at 50 Pa	at 50 Pa
SFP	kW/m³/s	1,38	1,3
Efficiency according EN 13141-7		79%	79%
Fuse	A	10	10
Electrical heating battery	W	500/1000	500/1000
Electrical re-heater power	W	2 x 83	2 x 83
Filter, supply air			
Pleat filter (PF)		F7/ePM1 60%	
Filter, extract air			
Pleat filter (PF)		M5/ePM10 50%	
Weight	kg	61	61

* With Indoor Air Quality accessories

SFP = Specific Fan Power (kW/m³/s)
The SFP value stated applies to the complete unit.

Performance data (Right unit)

Supply air

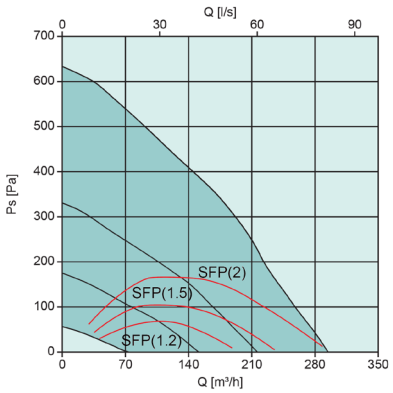

Extract air

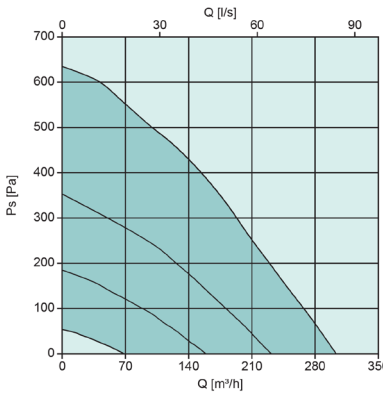

Scheme

Right-hand version

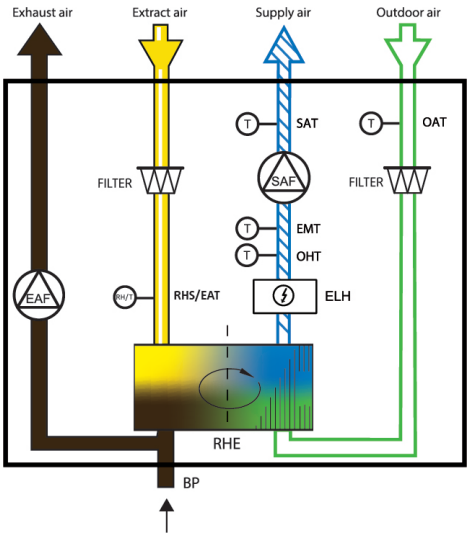

SAF	Supply fan
EAF	Extract fan
FILTER	Extract/Supply filter
OAT	Outdoor air temp. sensor
SAT	Supply air temp. sensor
RHS/EAT	Relative humidity sensor/Extract air temp. sensor
ELH	Electric heater
OHT	Overheating thermostat
EMT	Emergency thermostat
BP	Bypass cooker hood
RHE	Rotating Heat Exchanger

Dimensions

SAVE VTR 150/K Right-hand version

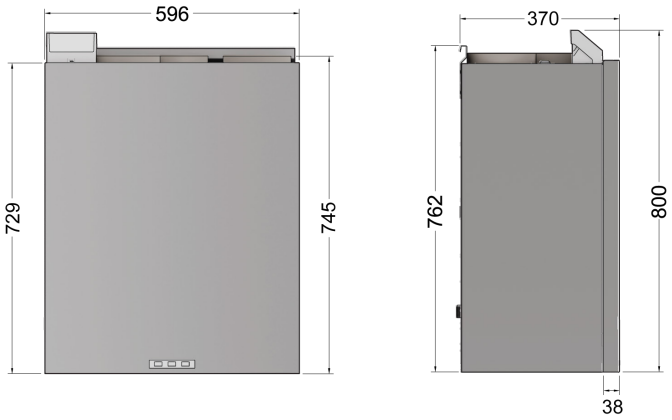

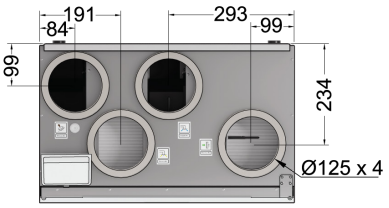

Supply
Exhaust
Fresh air/supply
Extract

Accessories

Accessories SAVE VTR 150/K		Art. no.
Controls		
SAVE TOUCH White	Touch display white	138077
SAVE TOUCH Black	Touch display black	138078
SAVE LIGHT White	SAVE Light White	319118
SAVE LIGHT Black	SAVE Light Black	319119
SAVE Wall Mounted Kit	Control panel frame	140736
CEC Cable 12m	VK-12	24782
CEC Cable 6m	VK-6	24783
Diverting Plug	Diverting Plug	37367
Indoor Air Quality Wired		
Systemair-E CO2 sensor	T8100-E-SA-1000RTD	14904
Systemair-E CO2 + RH + Temperature	T8100-E-H-SA-10R	211522
Systemair-1 CO2 duct sensor	T8041	14906
Duct sensor NTC10K (-30-70C) 1,5 m	TG-K3/NTC10-01	211524
Room sensor NTC10K (0-50C)	TG-R5/NTC10-01	211525
Presence detector	-	6995
VAV/CAV conversion kit	-	140777
Heating / Cooling		
Duct Water heating battery 2 Rows	VBC 125-2	5457
Duct Water heating battery 3 Rows	VBC 125-3	9839
Surface sensor NTC10K (-30-150C) 1,5 m	TG-A1/NTC10-01	211523
Actuator 0-10V	RVAZ4 24A	9862
2-Way-Valve	ZTV 15-0,4	9829
2-Way-Valve	ZTV 15-0,6	6571
3-Way-Valve	ZTR 15-0,4	9670
3-Way-Valve	ZTR 15-0,6	6573
Electrical Duct Heater	CB 125-0,6 230V/1	5289
Electrical Duct Heater	CB 125-1,2 230V/1	5290
Electrical Duct Heater	CB 125-1,8 230V/1	5377
CB heater connection kit	1-Phase kit	142852
Duct Cooler	CWK 125-3-2,5	30021
Filters		
PF VTR 150 STD kit	F7/ePM1 60% Supply M5/ePM10 50% Extract	145777
PF VTR 150 OPT kit 1	F8/ePM1 70% Supply M5/ePM10 50% Extract	145920
BF VTR 150 OPT kit 2	F7/ePM1 60% Supply M5/ePM10 60% Extract	153439
Other		
Combi grille 125, White	CVVX 125, white	26422
Combi grille 125, Black	CVVX 125, black	26421
Outdoor grille □125 white	-	477990
Outdoor grille □125 black	-	486800
Outdoor grille □125 Magnelis	-	487400
Fast clamp 125	FK 125	1608
Connection duct D125/1,0 M/F	SCD Flexible Silencer	2556
Silencer	LDC 125-600	5190
Silencer	LDC 125-900	5191
Control damper	TUNE-R-125-3-M1	311938
Control damper (Spring)	TUNE-R-125-3-M4	311968
Relay mounting kit	RMK Kit Systemair	576801
Control damper	TUNE-R-125-3-M2	311948
Control damper (Spring)	TUNE-R-125-3-M5	311978
Transformer 24V	PSS20 24V	202692
Iris Damper	SPI-125 C	6751
Pressure guard with pitot tube	DPR200T	212987
Duct cover, White	Duct cover W VTR 150/K	19566
Duct cover, Stainless	Duct cover SS VTR 150	19567

SAVE VSR 150/B

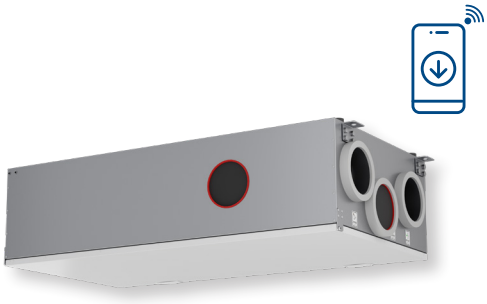

SAVE VSR 150/B is a side connected unit with high efficiency stepless rotary heat exchanger with cooker hood connection designed for installation in the ceiling in a home with a ventilated area of up to approx. 100 m².

VSR 150/B is galvanized, double skinned, fully insulated and comes with complete control functionality. Access door is white painted. The unit accurately controls the speed of the heat exchanger after the need of heat/cooling recovery using the step less rotor motor.

SAVE CONNECT internet access module is delivered as standard with all units for remote control via mobile APP.

SAVE PRO web application for own or client device remote monitoring, control and troubleshooting.

Download SAVE CONNECT app via Google Play or Apple store.

- High efficiency rotating heat exchanger with variable speed drive and high performance EC fans
- By-pass channel for connecting the kitchen hood
- Demand ventilation control is standard with the built in humidity sensor
- Built in electrical re-heater
- Selection of different control panels available:
  - SAVE TOUCH for full functionality
  - SAVE LIGHT for basic functionality
- Connection board for easy access
- Modbus communication RS-485 as standard

Mid-frequency band, Hz									
LwA dB(A)	**Tot**	63	125	250	500	1k	2k	4k	8k
Supply air	**60**	73	67	56	59	56	46	42	29
Extract air	**50**	68	51	50	52	36	23	17	21
Surrounding	**35**	50	44	35	36	24	20	16	20

The sound data table indicates the sound power level LwA, which should not be confused with the sound pressure level LpA (based on the operation point - 33 l/s at 50 Pa).

Technical data SAVE VSR 150/B		
Art. no.	Right/Left	588884/588885
Energy efficiency class		
Standard unit		A
Standard unit with accessories*		A
Voltage/Frequency	V/50 Hz	230
Power rating per fan	W	17
at example duty point:		33 l/s at 50 Pa
		118 m³/h at 50 Pa
SFP	kW/m³/s	0,988
Efficiency according EN 13141-7		85%
Fuse	A	10
Electrical re-heater power	W	500
Input power, fan motor	W	2 x 37
Filter, supply air		
Pleat filter (PF)		F7/ePM1 60%
Filter, extract air		
Pleat filter (PF)		M5/ePM10 50%
Weight	kg	49

* With Indoor Air Quality accessories

SFP = Specific Fan Power (kW/m³/s)
The SFP value stated applies to the complete unit.

Performance data

Supply air

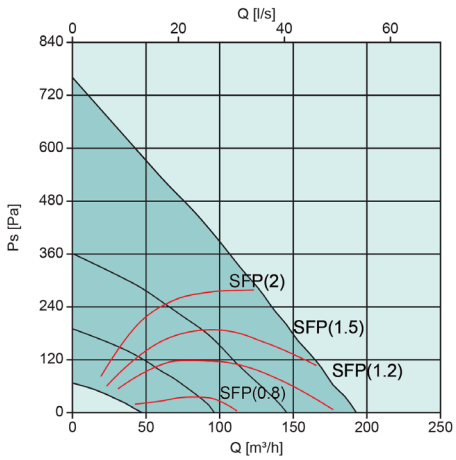

Extract air

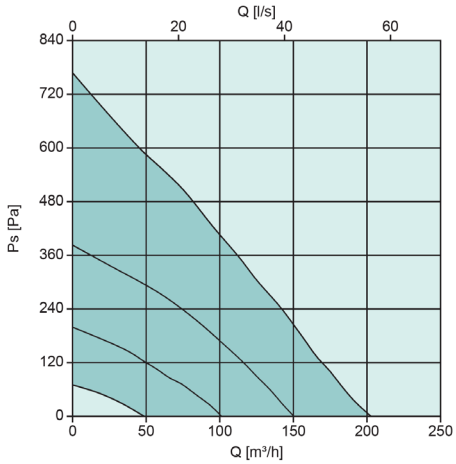

Scheme

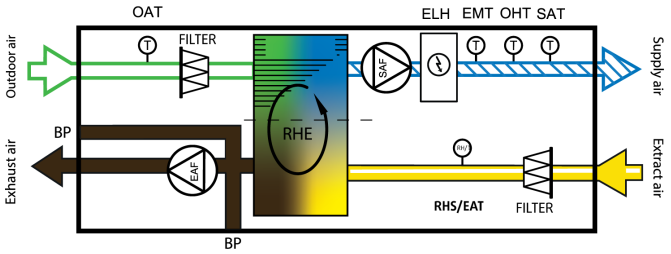

SAF	Supply fan
EAF	Extract fan
FILTER	Extract/Supply filter
OAT	Outdoor air temp. sensor
SAT	Supply air temp. sensor
RHS/EAT	Relative humidity sensor/Extract air temp. sensor
ELH	Electric heater
OHT	Overheating thermostat
EMT	Emergency thermostat
BP	Bypass cooker hood
RHE	Rotating Heat Exchanger

Dimensions

SAVE VSR 150/B Right hand version

* Cooker hood connection

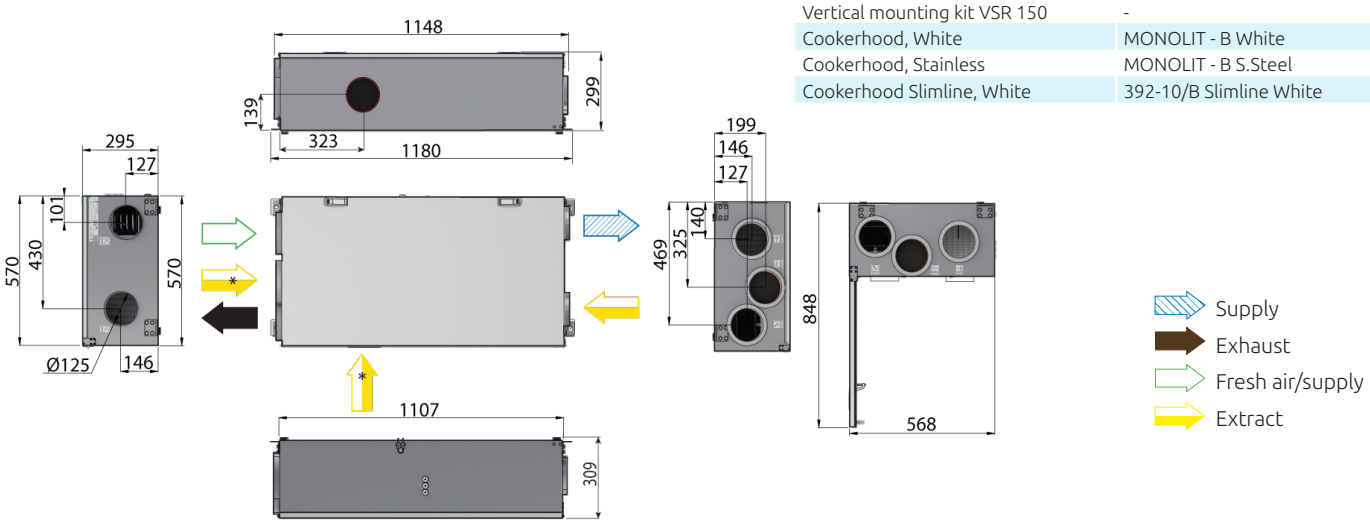

Accessories

Accessories SAVE VSR 150/B		Art. no.
Controls		
SAVE TOUCH White	Touch display white	138077
SAVE TOUCH Black	Touch display black	138078
SAVE LIGHT White	SAVE Light White	319118
SAVE LIGHT Black	SAVE Light Black	319119
SAVE Wall Mounted Kit	Control panel frame	140736
CEC Cable 12m	VK-12	24782
CEC Cable 6m	VK-6	24783
Diverting Plug	Diverting Plug	37367
Indoor Air Quality Wired		
Systemair-E CO2 sensor	T8100-E-SA-1000RTD	14904
Systemair-E CO2 + RH + Temperature	T8100-E-H-SA-10R	211522
Systemair-1 CO2 duct sensor	T8041	14906
Duct sensor NTC10K (-30-70C) 1,5 m	TG-K3/NTC10-01	211524
Room sensor NTC10K (0-50C)	TG-R5/NTC10-01	211525
Presence detector	-	6995
VAV/CAV conversion kit	-	140777
Heating / Cooling		
Duct Water heating battery 2 Rows	VBC 125-2	5457
Duct Water heating battery 3 Rows	VBC 125-3	9839
Surface sensor NTC10K (-30-150C) 1,5 m	TG-A1/NTC10-01	211523
Actuator 0-10V	RVAZ4 24A	9862
2-Way-Valve	ZTV 15-0,4	9829
2-Way-Valve	ZTV 15-0,6	6571
3-Way-Valve	ZTR 15-0,4	9670
3-Way-Valve	ZTR 15-0,6	6573
Electrical Duct Heater	CB 125-0,6 230V/1	5289
Electrical Duct Heater	CB 125-1,2 230V/1	5290
Electrical Duct Heater	CB 125-1,8 230V/1	5377
CB heater connection kit	1-Phase kit	142852
Duct Cooler	CWK 125-3-2,5	30021
Filters		
PF VSR 150 STD kit	F7/ePM1 60% Supply M5/ePM10 50% Extract	161651
PF VSR 150 OPT kit 1	F8/ePM1 70% Supply M5/ePM10 50% Extract	161652
Other		
Combi grille 125, White	CVVX 125, white	26422
Combi grille 125, Black	CVVX 125, black	26421
Fast clamp 125	FK 125	1608
Connection duct D125/1,0 M/F	SCD Flexible Silencer	2556
Silencer	LDC 125-600	5190
Silencer	LDC 125-900	5191
Control damper	TUNE-R-125-3-M1	311938
Control damper (Spring)	TUNE-R-125-3-M4	311968
Relay mounting kit	RMK Kit Systemair	576801
Control damper	TUNE-R-125-3-M2	311948
Control damper (Spring)	TUNE-R-125-3-M5	311978
Transformer 24V	PSS20 24V	202692
Iris Damper	SPI-125 C	6751
Pressure guard with pitot tube	DPR200T	212987
Horizontal mounting kit VSR 150	-	162999
Vertical mounting kit VSR 150	-	165599
Cookerhood, White	MONOLIT - B White	326800
Cookerhood, Stainless	MONOLIT - B S.Steel	326801
Cookerhood Slimline, White	392-10/B Slimline White	77265

SAVE VSR 200/B



SAVE VSR 200/B is a side connected unit with high efficiency stepless rotary heat exchanger with Cooker hood connection designed for installation in the ceiling in a home with a ventilated area of up to approx. 180 m².

VSR 200/B is galvanized, double skinned, fully insulated and comes with complete control functionality. Access door is white painted. The unit accurately controls the speed of the heat exchanger after the need of heat/cooling recovery using the step less rotor motor.

SAVE CONNECT internet access module is delivered as standard with all units for remote control via mobile APP.

SAVE PRO web application for own or client device remote monitoring, control and troubleshooting.

Download SAVE CONNECT app via Google Play or Apple store.

- High efficiency rotating heat exchanger with variable speed drive and high performance EC fans
- By-pass channel for connecting the kitchen hood
- Demand ventilation control is standard with the built in humidity sensor
- Built in electrical re-heater
- Selection of different control panels available:
  - SAVE TOUCH for full functionality
  - SAVE LIGHT for basic functionality
- Connection board for easy access
- Modbus communication RS-485 as standard

Mid-frequency band, Hz									
LwA dB(A)	**Tot**	63	125	250	500	1k	2k	4k	8k
Supply air	**62**	81	68	63	60	52	50	41	29
Extract air	**53**	70	50	60	48	33	28	20	24
Surrounding	**43**	53	43	49	40	28	25	19	24

The sound data table indicates the sound power level LwA, which should not be confused with the sound pressure level LpA (based on the operation point - 55 l/s at 50 Pa).

Technical data SAVE VSR 200/B		
Art. no.	Right/Left	588863/588864
Energy efficiency class		
Standard unit		A
Standard unit with accessories*		A
Voltage/Frequency	V/50 Hz	230
Power rating per fan	W	30
at example duty point:		55 l/s at 50 Pa
		199 m³/h at 50 Pa
SFP	kW/m³/s	1,09
Efficiency according EN 13141-7		83%
Fuse	A	10
Electrical re-heater power	W	1000
Input power, fan motor	W	2 x 83
Filter, supply air		
Pleat filter (PF)		F7/ePM1 60%
Filter, extract air		
Pleat filter (PF)		M5/ePM10 50%
Weight	kg	56

* With Indoor Air Quality accessories

SFP = Specific Fan Power (kW/m³/s)
The SFP value stated applies to the complete unit.

Performance data

Supply air

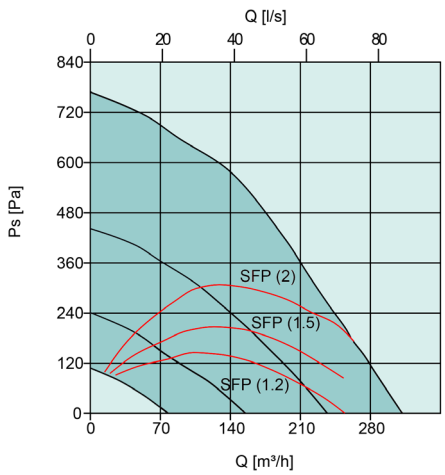

Extract air

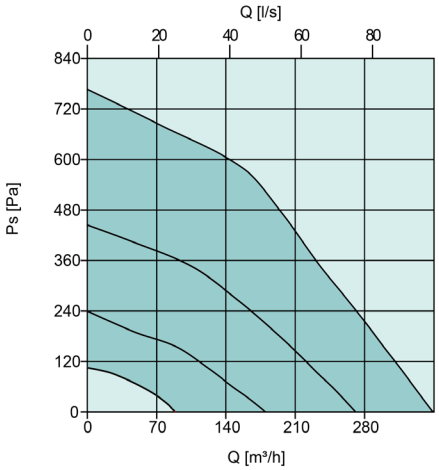

Scheme

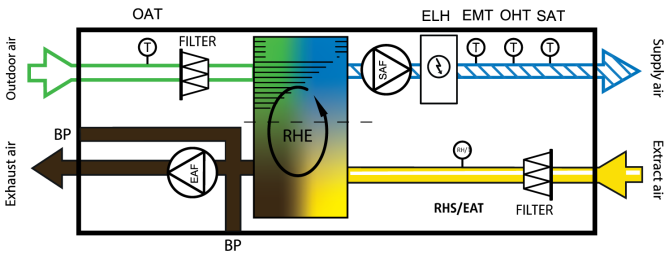

SAF	Supply fan
EAF	Extract fan
FILTER	Extract/Supply filter
OAT	Outdoor air temp. sensor
SAT	Supply air temp. sensor
RHS/EAT	Relative humidity sensor/Extract air temp. sensor
ELH	Electric heater
OHT	Overheating thermostat
EMT	Emergency thermostat
BP	Bypass cooker hood
RHE	Rotating Heat Exchanger

Dimensions

SAVE VSR 200/B

* Cooker hood connection

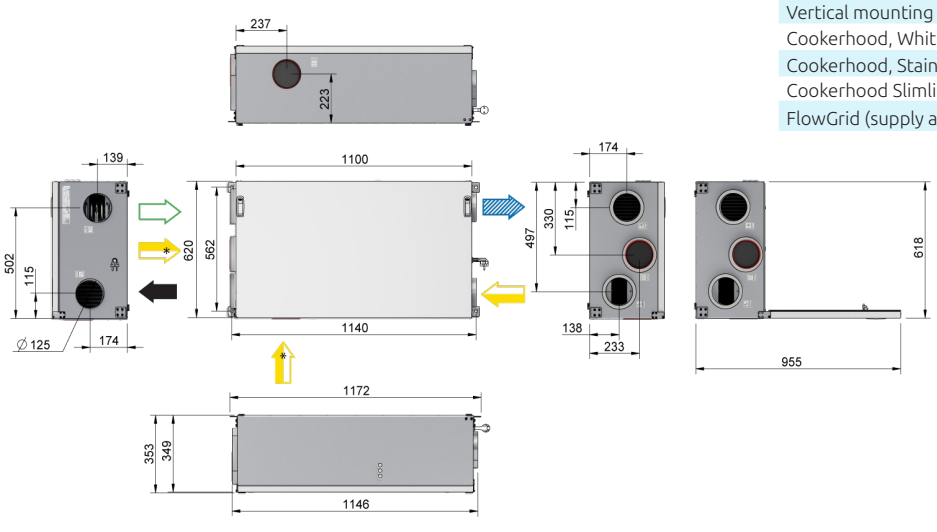

Accessories

Accessories SAVE VSR 200/B		Art. no.
Controls		
SAVE TOUCH White	Touch display white	138077
SAVE TOUCH Black	Touch display black	138078
SAVE LIGHT White	SAVE Light White	319118
SAVE LIGHT Black	SAVE Light Black	319119
SAVE Wall Mounted Kit	Control panel frame	140736
CEC Cable 12m	VK-12	24782
CEC Cable 6m	VK-6	24783
Diverting Plug	Diverting Plug	37367
Indoor Air Quality Wired		
Systemair-E CO2 sensor	T8100-E-SA-1000RTD	14904
Systemair-E CO2 + RH + Temperature	T8100-E-H-SA-10R	211522
Systemair-1 CO2 duct sensor	T8041	14906
Duct sensor NTC10K (-30-70C) 1,5 m	TG-K3/NTC10-01	211524
Room sensor NTC10K (0-50C)	TG-R5/NTC10-01	211525
Presence detector	-	6995
VAV/CAV conversion kit	-	140777
Heating / Cooling		
Duct Water heating battery 2 Rows	VBC 125-2	5457
Duct Water heating battery 3 Rows	VBC 125-3	9839
Surface sensor NTC10K (-30-150C) 1,5 m	TG-A1/NTC10-01	211523
Actuator 0-10V	RVAZ4 24A	9862
2-Way-Valve	ZTV 15-0,4	9829
2-Way-Valve	ZTV 15-0,6	6571
3-Way-Valve	ZTR 15-0,4	9670
3-Way-Valve	ZTR 15-0,6	6573
Electrical Duct Heater	CB 125-0,6 230V/1	5289
Electrical Duct Heater	CB 125-1,2 230V/1	5290
Electrical Duct Heater	CB 125-1,8 230V/1	5377
CB heater connection kit	1-Phase kit	142852
Duct Cooler	CWK 125-3-2,5	30021
Filters		
PF VSR 200 STD kit	F7/ePM1 60% Supply M5/ePM10 50% Extract	331831
PF VSR 200 OPT kit	F8/ePM1 70% Supply M5/ePM10 50% Extract	331832
Other		
Combi grille 125, White	CVVX 125, white	26422
Combi grille 125, Black	CVVX 125, black	26421
Outdoor grille □125 white	-	477990
Outdoor grille □125 black	-	486800
Outdoor grille □125 Magnelis	-	487400
Fast clamp 125	FK 125	1608
Connection duct D125/1,0 M/F	SCD Flexible Silencer	2556
Silencer	LDC 125-600	5190
Silencer	LDC 125-900	5191
Control damper	TUNE-R-125-3-M1	311938
Control damper (Spring)	TUNE-R-125-3-M4	311968
Relay mounting kit	RMK Kit Systemair	576801
Control damper	TUNE-R-125-3-M2	311948
Control damper (Spring)	TUNE-R-125-3-M5	311978
Transformer 24V	PSS20 24V	202692
Iris Damper	SPI-125 C	6751
Pressure guard with pitot tube	DPR200T	212987
Horizontal mounting kit VSR200	-	398258
Vertical mounting kit VSR200	-	398259
Cookerhood, White	MONOLIT - B White	326800
Cookerhood, Stainless	MONOLIT - B S.Steel	326801
Cookerhood Slimline, White	392-10/B Slimline White	77265
FlowGrid (supply and extract air fan)	FlowGrid 190 mm kit	151642



SAVE VTR 275/B



SAVE VTR 275/B is a top connected unit with high efficiency step less rotary heat exchanger with cooker hood connection designed for installation on the wall in a home with a ventilated area of up to approx. 220 m².

VTR 275/B is white painted, double skinned, fully insulated and comes with complete control functionality. The unit accurately controls the speed of the heat exchanger after the need of heat/cooling recovery using the step less rotor motor.

SAVE CONNECT internet access module is delivered as standard with all units for remote control via mobile APP.

SAVE PRO web application for own or client device remote monitoring, control and troubleshooting.

Download SAVE CONNECT app via Google Play or Apple store.

- High efficiency rotating heat exchanger with variable speed drive and high performance EC fans
- By-pass channel for connecting the kitchen hood
- Demand ventilation control is standard with the built in humidity sensor
- Selection of different control panels available:
  - SAVE TOUCH for full functionality
  - SAVE LIGHT for basic functionality
- Connection board for easy access
- Modbus communication RS-485 as standard

Mid-frequency band, Hz									
LwA dB(A)	Tot	63	125	250	500	1k	2k	4k	8k
Supply air	65	72	69	69	62	57	52	44	33
Extract air	56	73	61	63	52	44	36	25	24
Surrounding	40	46	42	46	38	29	26	20	24

The sound data table indicates the sound power level LwA, which should not be confused with the sound pressure level LpA (based on the operation point - 61 l/s at 50 Pa).

Technical data SAVE VTR 275/B		
Art. no. 500W	Right/Left	488879/488880
Art. no. 1000W	Right/Left	588879/588880
Energy efficiency class		
Standard unit		A
Standard unit with accessories*		A
Voltage/Frequency	V/50 Hz	230
Power rating per fan	W	34
at example duty point:		61 l/s at 50 Pa
		221m³/h at 50 Pa
SFP	kW/m³/s	1,20
Efficiency according EN 13141-7		79%
Fuse	A	10
Electrical re-heater power	W	500/1000
Input power, fan motor	W	2 x 81
Filter, supply air		
Pleat filter (PF)		F7/ePM1 60%
Filter, extract air		
Pleat filter (PF)		M5/ePM10 50%
Weight	kg	46

* With Indoor Air Quality accessories

SFP = Specific Fan Power (kW/m³/s)
The SFP value stated applies to the complete unit.

Performance data (Right unit)

Supply air

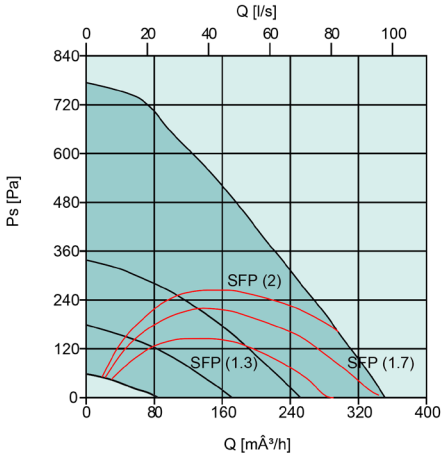

Extract air

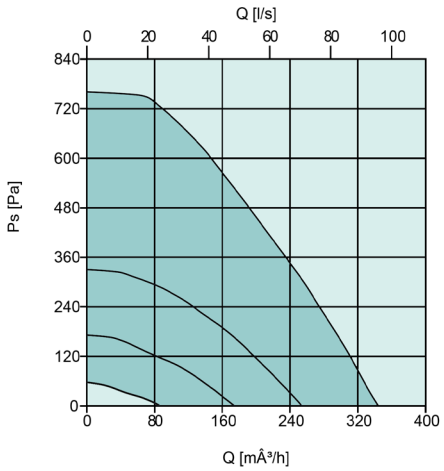

Scheme

Right-hand version

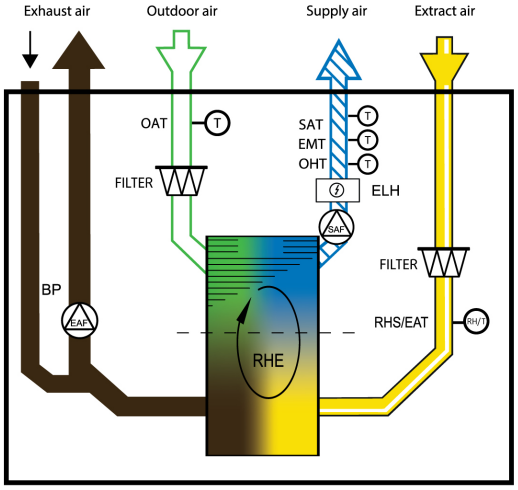

SAF	Supply fan
EAF	Extract fan
FILTER	Extract/Supply filter
OAT	Outdoor air temp. sensor
SAT	Supply air temp. sensor
RHS/EAT	Relative humidity sensor/Extract air temp. sensor
BP	Bypass cooker hood
RHE	Rotating Heat Exchanger

Dimensions

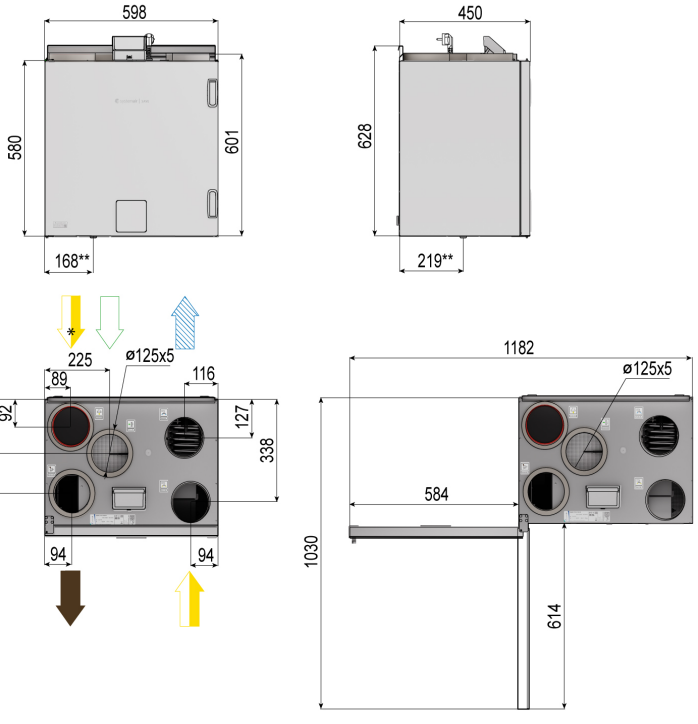

Accessories

Accessories SAVE VTR 275/B		Art. no.
Controls		
SAVE TOUCH White	Touch display white	138077
SAVE TOUCH Black	Touch display black	138078
SAVE LIGHT White	SAVE Light White	319118
SAVE LIGHT Black	SAVE Light Black	319119
SAVE Wall Mounted Kit	Control panel frame	140736
CEC Cable 12m	VK-12	24782
CEC Cable 6m	VK-6	24783
Diverting Plug	Diverting Plug	37367
Indoor Air Quality Wired		
Systemair-E CO2 sensor	T8100-E-SA-1000RTD	14904
Systemair-E CO2 + RH + Temperature	T8100-E-H-SA-10R	211522
Systemair-1 CO2 duct sensor	T8041	14906
Duct sensor NTC10K (-30-70C) 1,5 m	TG-K3/NTC10-01	211524
Room sensor NTC10K (0-50C)	TG-R5/NTC10-01	211525
Presence detector	-	6995
VAV/CAV conversion kit	-	140777
Heating / Cooling		
Duct Water heating battery 2 Rows	VBC 125-2	5457
Duct Water heating battery 3 Rows	VBC 125-3	9839
Surface sensor NTC10K (-30-150C) 1,5 m	TG-A1/NTC10-01	211523
Actuator 0-10V	RVAZ4 24A	9862
2-Way-Valve	ZTV 15-0,4	9829
2-Way-Valve	ZTV 15-0,6	6571
3-Way-Valve	ZTR 15-0,4	9670
3-Way-Valve	ZTR 15-0,6	6573
Electrical Duct Heater	CB 125-0,6 230V/1	5289
Electrical Duct Heater	CB 125-1,2 230V/1	5290
Electrical Duct Heater	CB 125-1,8 230V/1	5377
CB heater connection kit	1-Phase kit	142852
Duct Cooler	CWK 125-3-2,5	30021
Filters		
PF VTR275 STD kit	F7/ePM1 60% Supply M5/ePM10 50% Extract	278568
PF VTR275 OPT kit	F8/ePM1 70% Supply M5/ePM10 50% Extract	278569
Other		
Combi grille 125, White	CVVX 125, white	26422
Combi grille 125, Black	CVVX 125, black	26421
Fast clamp 125	FK 125	1608
Connection duct D125/1,0 M/F	SCD Flexible Silencer	2556
Silencer	LDC 125-600	5190
Silencer	LDC 125-900	5191
Control damper	TUNE-R-125-3-M1	311938
Control damper (Spring)	TUNE-R-125-3-M4	311968
Relay mounting kit	RMK Kit Systemair	576801
Control damper	TUNE-R-125-3-M2	311948
Control damper (Spring)	TUNE-R-125-3-M5	311978
Transformer 24V	PSS20 24V	202692
Iris Damper	SPI-125 C	6751
Pressure guard with pitot tube	DPR200T	212987
Cookerhood, White	MONOLIT - B White	326800
Cookerhood, Stainless	MONOLIT - B S.Steel	326801
Cookerhood Slimline, White	392-10/B Slimline White	77265
Drainage kit	Drain pipe kit	146077

Supply
Exhaust
Fresh air/supply
Extract

* Cooker hood connection
*** Drainage connection

SAVE VTR 350/B



SAVE VTR 350/B is a top connected unit with high efficiency variable speed rotary heat exchanger with cooker hood connection designed for installation on the wall in a home with a ventilated area of up to approx. 300 m².

VTR 350/B is white painted, double skinned, fully insulated and comes with complete control functionality. The unit accurately controls the speed of the heat exchanger after the need of heat/cooling recovery using the step less rotor motor.

SAVE CONNECT internet access module is delivered as standard with all units for remote control via mobile APP.

SAVE PRO web application for own or client device remote monitoring, control and troubleshooting.

Download SAVE CONNECT app via Google Play or Apple store.

- High efficiency rotating heat exchanger with variable speed drive and high performance EC fans
- By-pass channel for connecting the kitchen hood
- Demand ventilation control is standard with the built in humidity sensor
- Built in electrical re-heater
- Water heater battery available as accessory
- Selection of different control panels available:
  - SAVE TOUCH for full functionality
  - SAVE LIGHT for basic functionality
- Connection board for easy access
- Modbus communication RS-485 as standard

Mid-frequency band, Hz									
LwA dB(A)	**Tot**	63	125	250	500	1k	2k	4k	8k
Supply air	**66**	76	72	66	67	58	57	52	40
Extract air	**57**	68	60	62	54	46	40	27	21
Surrounding	**44**	53	52	47	43	32	31	24	20

The sound data table indicates the sound power level LwA, which should not be confused with the sound pressure level LpA (based on the operation point - 98 l/s at 50 Pa).

Technical data SAVE VTR 350/B		
Art. no.	Right/Left	488920/488921
Energy efficiency class		
Standard unit		A
Standard unit with accessories*		A
Voltage/Frequency	V/50Hz	230
Power rating per fan	W	70
at example duty point:		98 l/s at 50 Pa
		353 m³/h at 50 Pa
SFP	kW/m³/s	1,43
Efficiency according EN 13141-7		82%
Fuse	A	13
Electrical re-heater power	W	1670
Input power, fan motor	W	2 x 169
Filter, supply air		
Pleat filter (PF)		F7/ePM1 60%
Filter, extract air		
Pleat filter (PF)		M5/ePM10 50%
Weight	kg	66

* With Indoor Air Quality accessories

SFP = Specific Fan Power (kW/m³/s)
The SFP value stated applies to the complete unit.

Performance data (Right unit)

Supply air

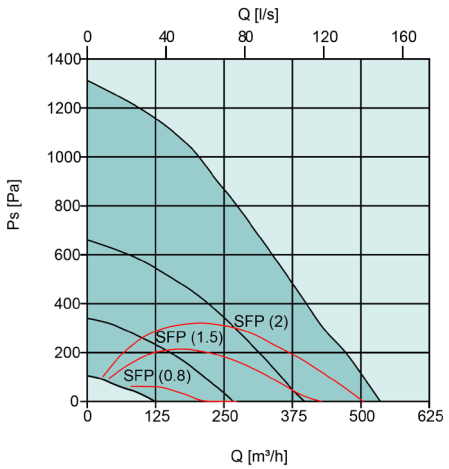

Extract air

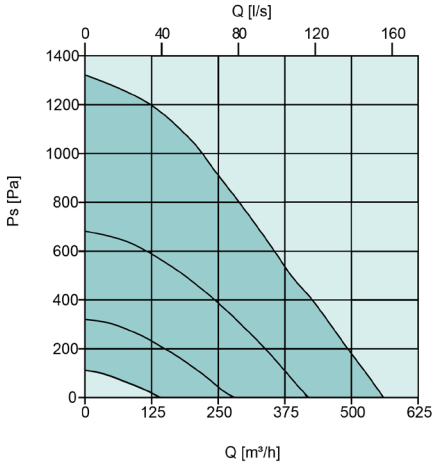

Scheme

Right-hand version

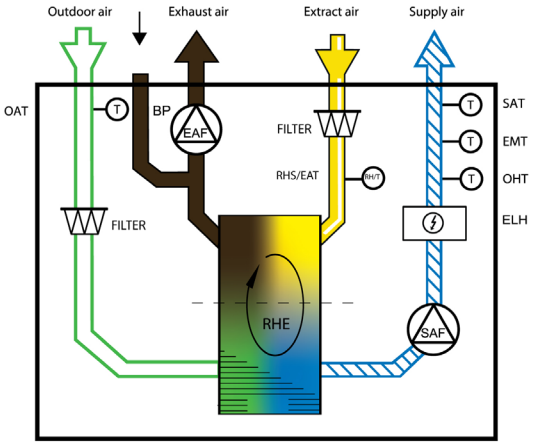

SAF	Supply fan
EAF	Extract fan
FILTER	Extract/Supply filter
OAT	Outdoor air temp. sensor
SAT	Supply air temp. sensor
RHS/EAT	Relative humidity sensor/Extract air temp. sensor
ELH	Electric heater
OHT	Overheating thermostat
EMT	Emergency thermostat
BP	Bypass cooker hood
RHE	Rotating Heat Exchanger

Dimensions

SAVE VTR 350/B Right-hand version

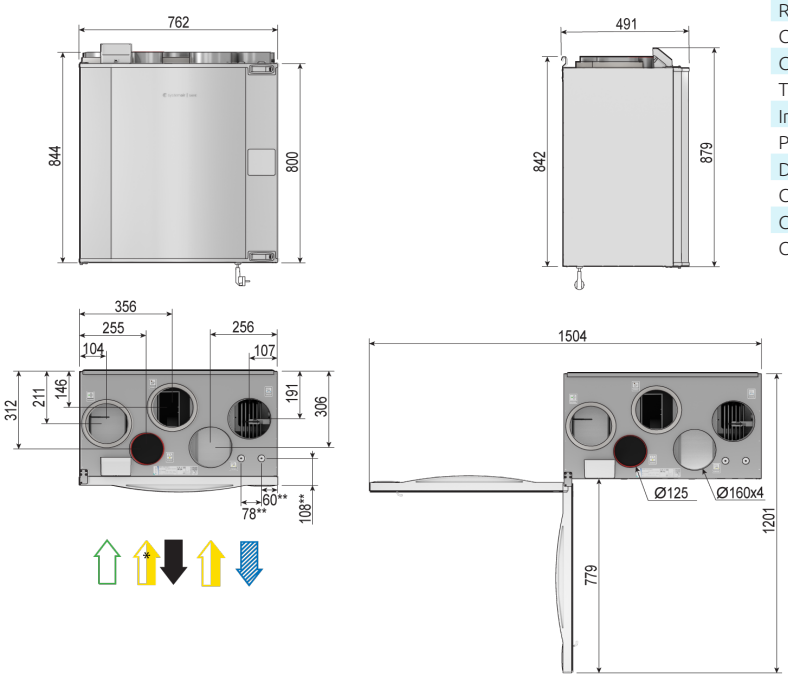

Accessories

Accessories SAVE VTR 350/B		Art. no.
Controls		
SAVE TOUCH White	Touch display white	138077
SAVE TOUCH Black	Touch display black	138078
SAVE LIGHT White	SAVE Light White	319118
SAVE LIGHT Black	SAVE Light Black	319119
SAVE Wall Mounted Kit	Control panel frame	140736
CEC Cable 12m	VK-12	24782
CEC Cable 6m	VK-6	24783
Diverting Plug	Diverting Plug	37367
Indoor Air Quality Wired		
Systemair-E CO2 sensor	T8100-E-SA-1000RTD	14904
Systemair-E CO2 + RH + Temperature	T8100-E-H-SA-10R	211522
Systemair-1 CO2 duct sensor	T8041	14906
Duct sensor NTC10K (-30-70C) 1,5 m	TG-K3/NTC10-01	211524
Room sensor NTC10K (0-50C)	TG-R5/NTC10-01	211525
Presence detector	-	6995
VAV/CAV conversion kit SAVE	-	140777
Heating / Cooling		
Water coil VTR 300/350	WH VTR 300/350/B	141700
Duct Water heating battery 2 Rows	VBC 160-2	5458
Duct Water heating battery 3 Rows	VBC 160-3	9840
Surface sensor NTC10K (-30-150C) 1,5 m	TG-A1/NTC10-01	211523
Actuator 0-10V	RVAZ4 24A	9862
2-Way-Valve	ZTV 15-0,4	9829
2-Way-Valve	ZTV 15-0,6	6571
3-Way-Valve	ZTR 15-0,4	9670
3-Way-Valve	ZTR 15-0,6	6573
Electrical Duct Heater	CB 160-1,2 230V/1	5291
Electrical Duct Heater	CB 160-2,1 230V/1	5292
Electrical Duct Heater	CB 160-2,7 230V/1	5382
CB heater connection kit	1-Phase kit	142852
Electrical Duct Heater	CB 160-5,0 400V/2	5383
Duct Cooler	CWK 160-3-2,5	30022
Filters		
PF VTR 300/350 STD kit	F7/ePM1 60% Supply M5/ePM10 50% Extract	246659
PF VTR 300/350 OPT kit	F8/ePM1 70% Supply M5/ePM10 50% Extract	317696
Other		
Combi grille 160, White	CVVX 160, white	25396
Combi grille 160, Black	CVVX 160, black	25394
Fast clamp 160	FK 160	1610
Connection duct D 160/1,0 M/F	SCD Flexible Silencer	2558
Silencer	LDC 160-600	5192
Silencer	LDC 160-900	5193
Control damper	TUNE-R-160-3-M1	311939
Control damper (Spring)	TUNE-R-160-3-M4	311969
Relay mounting kit	RMK Kit Systemair	576801
Control damper	TUNE-R-160-3-M2	311949
Control damper (Spring)	TUNE-R-160-3-M5	311979
Transformer 24V	PSS20 24V	202692
Iris Damper	SPI-160 C	6753
Pressure guard with pitot tube	DPR200T	212987
Duct cover	Duct cover VTR 300	113489
Cookerhood, White	MONOLIT - B White	326800
Cookerhood, Stainless	MONOLIT - B S.Steel	326801
Cookerhood Slimline, White	392-10/B Slimline White	490184

SAVE VSC 100

Condensation and enthalpy model



SAVE VSC 100 (condensation) or SAVE VSC-E 100 (enthalpy) is a side connected counter flow unit designed for installation in the ceiling in a home with a ventilated area of up to approx. 100 m².

VSC 100 or VSC-E 100 is galvanized, double skinned, fully insulated and comes with complete control functionality. The unit automatically regulates the recovery of heating/cooling by the built in damper and has automatic defrosting function.

SAVE CONNECT internet access module is delivered as standard with all units for remote control via mobile APP.

SAVE PRO web application for own or client device remote monitoring, control and troubleshooting.

Download SAVE CONNECT app via Google Play or Apple store.

- High efficiency condensation and enthalpy heat exchanger with high performance EC fans
- Demand ventilation control is standard with the built in humidity sensor
- Automatic defrosting
- Preheater needed for outdoor temperature < -3°C/-10°C (E)
- Selection of different control panels available:
  - SAVE TOUCH for full functionality
  - SAVE LIGHT for basic functionality
- Connection board for easy access
- Modbus communication RS-485 as standard

Technical data SAVE VSC 100 and SAVE VSC-E 100			
Art. no. (condensation)		488806	
Art. no. (enthalpy)		488900	
Energy efficiency class			
Standard unit		A	
Standard unit with accessories*		A+	
Voltage/Frequency	V/50Hz	230	
Power rating per fan	W	12	
at example duty point:		32 l/s at 50 Pa	
		116 m³/h at 50 Pa	
SFP	kW/m³/s	0,74	
Efficiency according EN 13141-7		86%	85% (E)**
Fuse	A	10	
Input power, fan motor	W	2 x 27	
Filter, supply air			
Pleat filter (PF)		F7/ePM1 60%	
Filter, extract air			
Pleat filter (PF)		M5/ePM10 50%	
Weight	kg	47	48 (E)**

* With Indoor Air Quality accessories
** (E) - Enthalpy version

SFP = Specific Fan Power (kW/m³/s)
The SFP value stated applies to the complete unit.

Mid-frequency band, Hz									
LwA dB(A)	**Tot**	63	125	250	500	1k	2k	4k	8k
Supply air	**61**	71	64	62	59	55	49	44	28
Extract air	**47**	66	46	53	43	22	14	16	19
Surrounding	**36**	43	42	42	33	21	16	17	21

The sound data table indicates the sound power level LwA, which should not be confused with the sound pressure level LpA (based on the operation point - 32 l/s at 50 Pa).

Performance data (Right unit)

Supply air

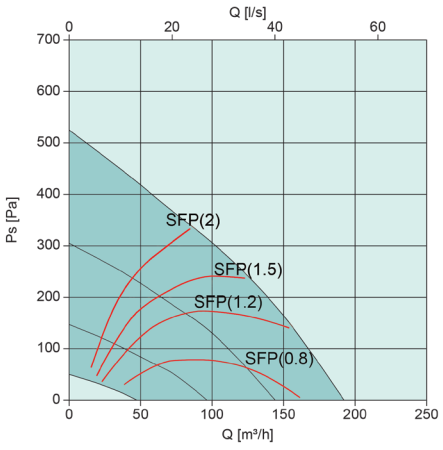

Extract air

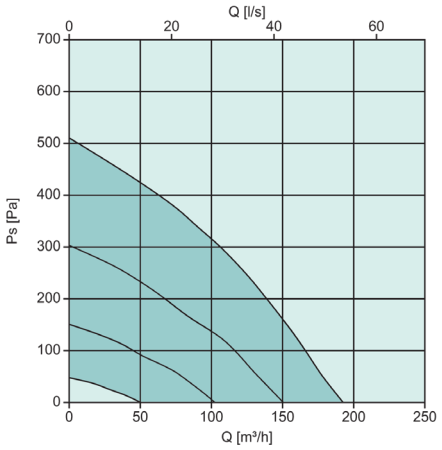

Scheme

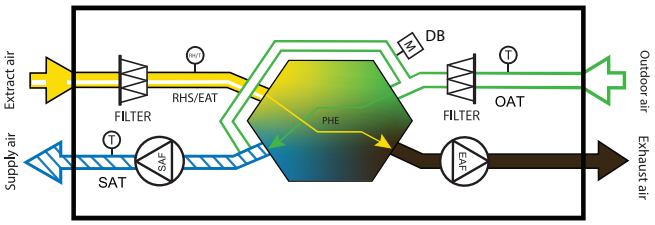

SAF	Supply fan
EAF	Extract fan
FILTER	Extract/Supply filter
OAT	Outdoor air temp. sensor
SAT	Supply air temp. sensor
RHS/EAT	Relative humidity sensor/Extract air temp. sensor
DB	Bypass damper drive
PHE	Plate Heat Exchanger

Dimensions

SAVE VSC 100

Accessories

Accessories SAVE VSC 100 and SAVE VSC-E 100		Art. no.
Controls		
SAVE TOUCH White	Touch display white	138077
SAVE TOUCH Black	Touch display black	138078
SAVE LIGHT White	SAVE Light White	319118
SAVE LIGHT Black	SAVE Light Black	319119
SAVE Wall Mounted Kit	Control panel frame	140736
CEC Cable 12m	VK-12	24782
CEC Cable 6m	VK-6	24783
Diverting Plug	Diverting Plug	37367
Indoor Air Quality Wired		
Systemair-E CO2 sensor	T8100-E-SA-1000RTD	14904
Systemair-E CO2 + RH + Temperature	T8100-E-H-SA-10R	211522
Systemair-1 CO2 duct sensor	T8041	14906
Duct sensor NTC10K (-30-70C) 1,5 m	TG-K3/NTC10-01	211524
Room sensor NTC10K (0-50C)	TG-R5/NTC10-01	211525
Presence detector	-	6995
VAV/CAV conversion kit	-	140777
Heating / Cooling		
Duct Water heating battery 2 Rows	VBC 125-2	5457
Duct Water heating battery 3 Rows	VBC 125-3	9839
Surface sensor NTC10K(-30-150C)1,5 m	TG-A1/NTC10-01	211523
Actuator 0-10V	RVAZ4 24A	9862
2-Way-Valve	ZTV 15-0,4	9829
2-Way-Valve	ZTV 15-0,6	6571
3-Way-Valve	ZTR 15-0,4	9670
3-Way-Valve	ZTR 15-0,6	6573
Electrical Duct Heater	CB 125-0,6 230V/1	5289
Electrical Duct Heater	CB 125-1,2 230V/1	5290
Electrical Duct Heater	CB 125-1,8 230V/1	5377
CB heater connection kit	1-Phase kit	142852
Duct Cooler	CWK 125-3-2,5	30021
Filters		
PF VSC 100 STD kit	F7/ePM1 60% Supply M5/ePM10 50% Extract	239523
PF VSC 100 OPT kit	F8/ePM1 70% Supply M5/ePM10 50% Extract	239524
Other		
Combi grille 125, White	CVVX 125, white	26422
Combi grille 125, Black	CVVX 125, black	26421
Fast clamp 125	FK 125	1608
Connection duct D125/1,0 M/F	SCD Flexible Silencer	2556
Silencer	LDC 125-600	5190
Silencer	LDC 125-900	5191
Control damper	TUNE-R-125-3-M1	311938
Control damper (Spring)	TUNE-R-125-3-M4	311968
Relay mounting kit	RMK Kit Systemair	576801
Control damper	TUNE-R-125-3-M2	311948
Control damper (Spring)	TUNE-R-125-3-M5	311978
Transformer 24V	PSS20 24V	202692
Iris Damper	SPI-125 C	6751
Pressure guard with pitot tube	DPR200T	212987

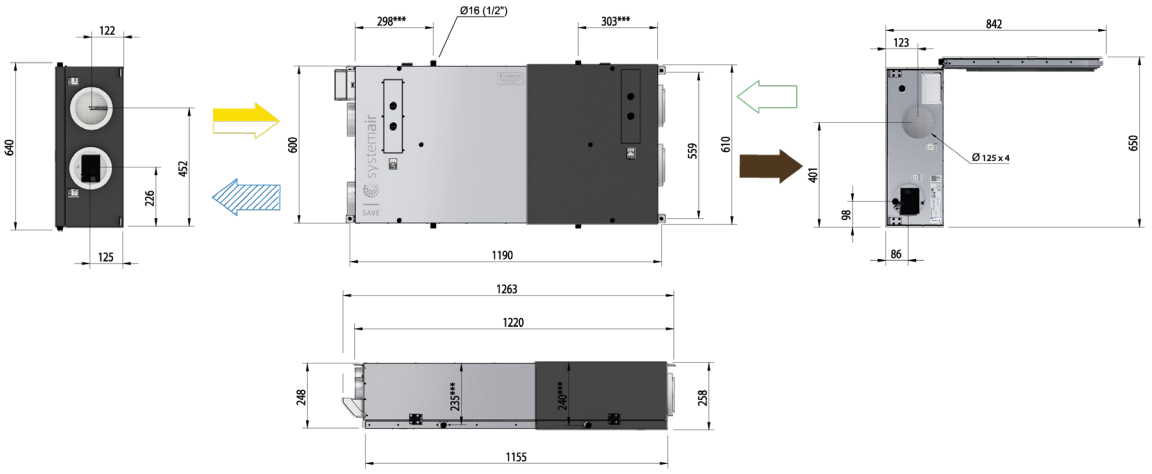

Supply
Exhaust
Fresh air/supply
Extract

*** Drainage connection

SAVE VSC 200

Condensation and enthalpy model



SAVE VSC 200 (condensation) or SAVE VSC-E 200 (enthalpy) is a side connected counter flow unit designed for installation in the ceiling in a home with a ventilated area of up to approx. 200 m².

VSC 200 or VSC-E 200 is galvanized, double skinned, fully insulated and comes with complete control functionality. The unit automatically regulates the recovery of heating/cooling by the built in damper and has automatic defrosting function.

SAVE CONNECT internet access module is delivered as standard with all units for remote control via mobile APP.

SAVE PRO web application for own or client device remote monitoring, control and troubleshooting.

Download SAVE CONNECT app via Google Play or Apple store.

- High efficiency condensation and enthalpy heat exchanger with high performance EC fans
- Demand ventilation control is standard with the built in humidity sensor
- Automatic defrosting
- Preheater needed for outdoor temperature < -3°C/-10°C (E)
- Selection of different control panels available:
  - SAVE TOUCH for full functionality
  - SAVE LIGHT for basic functionality
- Connection board for easy access
- Modbus communication RS-485 as standard

Technical data SAVE VSC 200 and SAVE VSC-E 200		
Art. no. (condensation)		488807
Art. no. (enthalpy)		488901
Energy efficiency class		
Standard unit		A
Standard unit with accessories*		A
Voltage/Frequency	V/50Hz	230
Power rating per fan at example duty point:	W	37 65 l/s at 50 Pa 233 m³/h at 50 Pa
SFP	kW/m³/s	1,15
Efficiency according EN 13141-7		89% 83% (E)**
Fuse	A	10
Input power, fan motor	W	2x81
Filter, supply air		
Pleat filter (PF)		F7/ePM1 60%
Filter, extract air		
Pleat filter (PF)		M5/ePM10 50%
Weight	kg	70

* With Indoor Air Quality accessories
** (E) - Enthalpy version

SFP = Specific Fan Power (kW/m³/s)
The SFP value stated applies to the complete unit.

Mid-frequency band, Hz									
LwA dB(A)	**Tot**	63	125	250	500	1k	2k	4k	8k
Supply air	**62**	74	66	65	60	54	52	44	33
Extract air	**56**	74	52	63	44	27	21	18	24
Surrounding	**45**	50	41	52	37	24	19	19	24

The sound data table indicates the sound power level LwA, which should not be confused with the sound pressure level LpA (based on the operation point - 65 l/s at 50 Pa).

Performance data (Right unit)

Supply air

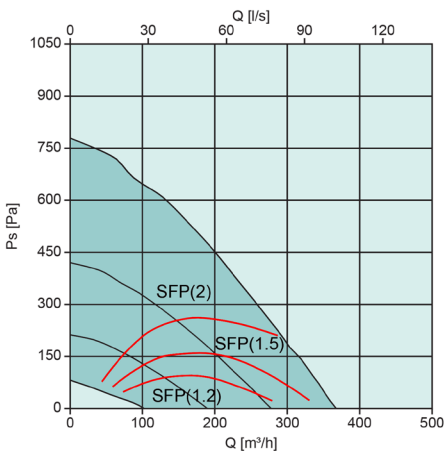

Extract air

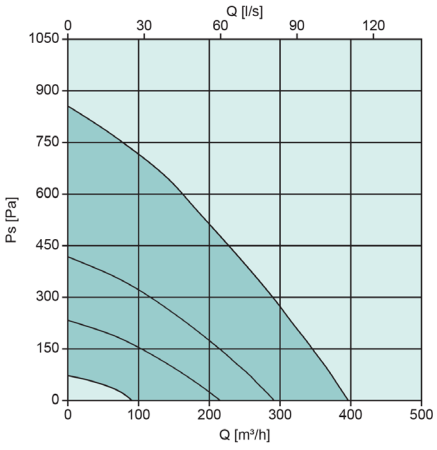

Scheme

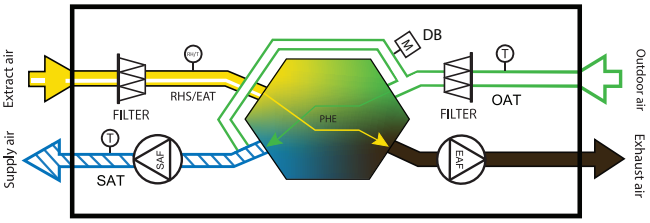

SAF	Supply fan
EAF	Extract fan
FILTER	Extract/Supply filter
OAT	Outdoor air temp. sensor
SAT	Supply air temp. sensor
RHS/EAT	Relative humidity sensor/Extract air temp. sensor
DB	Bypass damper drive
PHE	Plate Heat Exchanger

Dimensions

SAVE VSC 200

Accessories

Accessories SAVE VSC 200 and VSC-E 200		Art. no.
Controls		
SAVE TOUCH White	Touch display white	138077
SAVE TOUCH Black	Touch display black	138078
SAVE LIGHT White	SAVE Light White	319118
SAVE LIGHT Black	SAVE Light Black	319119
SAVE Wall Mounted Kit	Control panel frame	140736
CEC Cable 12m	VK-12	24782
CEC Cable 6m	VK-6	24783
Diverting Plug	Diverting Plug	37367
Indoor Air Quality Wired		
Systemair-E CO2 sensor	T8100-E-SA-1000RTD	14904
Systemair-E CO2 + RH + Temperature	T8100-E-H-SA-10R	211522
Systemair-1 CO2 duct sensor	T8041	14906
Duct sensor NTC10K (-30-70C) 1,5 m	TG-K3/NTC10-01	211524
Room sensor NTC10K (0-50C)	TG-R5/NTC10-01	211525
Presence detector	-	6995
VAV/CAV conversion kit	-	140777
Heating / Cooling		
Duct Water heating battery 2 Rows	VBC 125-2	5457
Duct Water heating battery 3 Rows	VBC 125-3	9839
Surface sensor NTC10K(-30-150C)1,5 m	TG-A1/NTC10-01	211523
Actuator 0-10V	RVAZ4 24A	9862
2-Way-Valve	ZTV 15-0,4	9829
2-Way-Valve	ZTV 15-0,6	6571
3-Way-Valve	ZTR 15-0,4	9670
3-Way-Valve	ZTR 15-0,6	6573
Electrical Duct Heater	CB 125-0,6 230V/1	5289
Electrical Duct Heater	CB 125-1,2 230V/1	5290
Electrical Duct Heater	CB 125-1,8 230V/1	5377
CB heater connection kit	1-Phase kit	142852
Duct Cooler	CWK 125-3-2,5	30021
Filters		
PF VSC 200 STD kit	F7/ePM1 60% Supply M5/ePM10 50% Extract	251905
PF VSC 200 OPT kit	F8/ePM1 70% Supply M5/ePM10 50% Extract	251906
Other		
Combi grille 125, White	CVVX 125, white	26422
Combi grille 125, Black	CVVX 125, black	26421
Fast clamp 125	FK 125	1608
Connection duct D125/1,0 M/F	SCD Flexible Silencer	2556
Silencer	LDC 125-600	5190
Silencer	LDC 125-900	5191
Control damper	TUNE-R-125-3-M1	311938
Control damper (Spring)	TUNE-R-125-3-M4	311968
Relay mounting kit	RMK Kit Systemair	576801
Control damper	TUNE-R-125-3-M2	311948
Control damper (Spring)	TUNE-R-125-3-M5	311978
Transformer 24V	PSS20 24V	202692
Iris Damper	SPI-125 C	6751
Pressure guard with pitot tube	DPR200T	212987

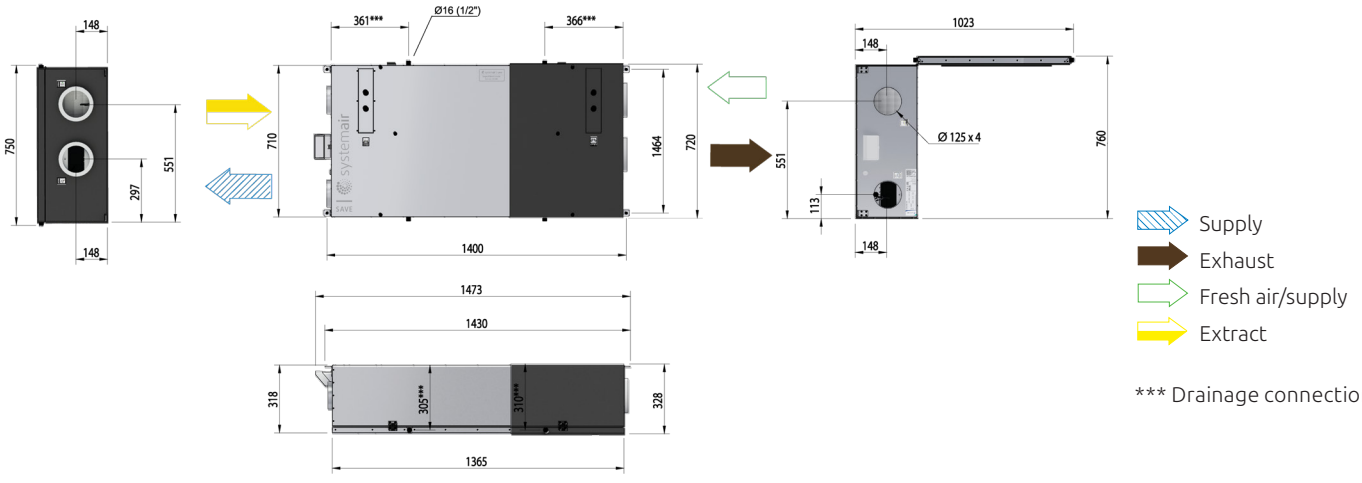

*** Drainage connection

SAVE VSC 300

Condensation and enthalpy model



SAVE VSC 300 (condensation) or SAVE VSC-E 300 (enthalpy) is a side connected counter flow unit designed for installation in the ceiling in a home with a ventilated area of up to approx. 320 m².

VSC 300 or VSC-E 300 is galvanized, double skinned, fully insulatedand comes with complete control functionality. The unit automatically regulates the recovery of heating/ cooling by the built in damper and has automatic defrosting function.

SAVE CONNECT internet access module is delivered as standard with all units for remote control via mobile APP.

SAVE PRO web application for own or client device remote monitoring, control and troubleshooting.

Download SAVE CONNECT app via Google Play or Apple store.

- High efficiency condensation and enthalpy heat exchanger with high performance EC fans
- Demand ventilation control is standard with the built in humidity sensor
- Automatic defrosting
- Preheater needed for outdoor temperature < -3°C/-10°C (E)
- Selection of different control panels available:
  - SAVE TOUCH for full functionality
  - SAVE LIGHT for basic functionality
- Connection board for easy access
- Modbus communication RS-485 as standard

Mid-frequency band, Hz									
LwA dB(A)	**Tot**	63	125	250	500	1k	2k	4k	8k
Supply air	**70**	76	72	76	65	59	59	52	40
Extract air	**46**	71	50	51	40	30	28	20	24
Surrounding	**46**	52	49	53	36	26	25	21	24

The sound data table indicates the sound power level LwA, which should not be confused with the sound pressure level LpA (based on the operation point - 99 l/s at 50 Pa).

Technical data SAVE VSC 300 and VSC-E 300		
Art. no. (condensation)		488808
Art. no. (enthalpy)		488902
Energy efficiency class		
Standard unit		A
Standard unit with accessories*		A
Voltage/Frequency	V/50Hz	230
Power rating per fan at example duty point:	W	52 99 l/s at 50 Pa 358 m³/h at 50 Pa
SFP	kW/m³/s	1,04
Efficiency according EN 13141-7		85% 79% (E)**
Fuse	A	10
Input power, fan motor	W	2 x 115
Filter, supply air		
Pleat filter (PF)		F7/ePM1 60%
Filter, extract air		
Pleat filter (PF)		M5/ePM10 50%
Weight	kg	80 81 (E)**

* With Indoor Air Quality accessories
** (E) - Enthalpy version

SFP = Specific Fan Power (kW/m³/s)
The SFP value stated applies to the complete unit.

Performance data (Right unit)

Supply air

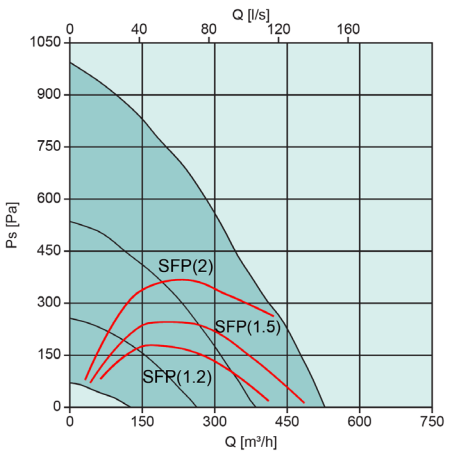

Extract air

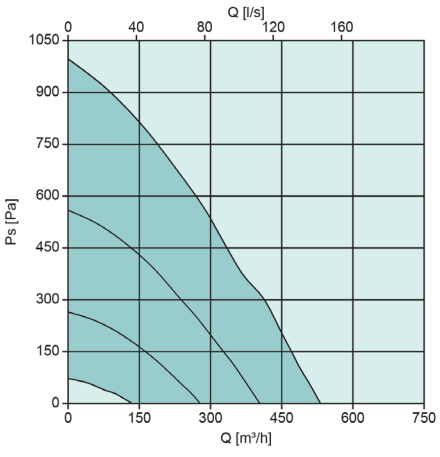

Scheme

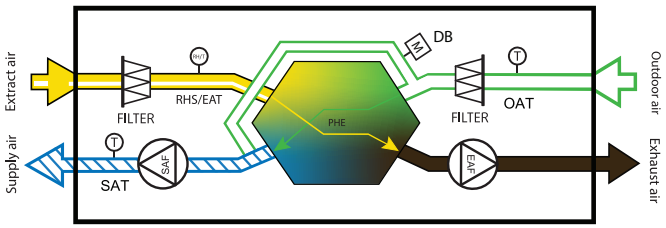

SAF	Supply fan
EAF	Extract fan
FILTER	Extract/Supply filter
OAT	Outdoor air temp. sensor
SAT	Supply air temp. sensor
RHS/EAT	Relative humidity sensor/Extract air temp. sensor
DB	Bypass damper drive
PHE	Plate Heat Exchanger

Dimensions

SAVE VSC 300

Accessories

Accessories SAVE VSC 300 and VSC-E 300		Art. no.
Controls		
SAVE TOUCH White	Touch display white	138077
SAVE TOUCH Black	Touch display black	138078
SAVE LIGHT White	SAVE Light White	319118
SAVE LIGHT Black	SAVE Light Black	319119
SAVE Wall Mounted Kit	Control panel frame	140736
CEC Cable 12m	VK-12	24782
CEC Cable 6m	VK-6	24783
Diverting Plug	Diverting Plug	37367
Indoor Air Quality Wired		
Systemair-E CO2 sensor	T8100-E-SA-1000RTD	14904
Systemair-E CO2 + RH + Temperature	T8100-E-H-SA-10R	211522
Systemair-1 CO2 duct sensor	T8041	14906
Duct sensor NTC10K (-30-70C) 1,5 m	TG-K3/NTC10-01	211524
Room sensor NTC10K (0-50C)	TG-R5/NTC10-01	211525
Presence detector	-	6995
VAV/CAV conversion kit	-	140777
Heating / Cooling		
Duct Water heating battery 2 Rows	VBC 160-2	5458
Duct Water heating battery 3 Rows	VBC 160-3	9840
Surface sensor NTC10K(-30-150C)1,5 m	TG-A1/NTC10-01	211523
Actuator 0-10V	RVAZ4 24A	9862
2-Way-Valve	ZTV 15-0,4	9829
2-Way-Valve	ZTV 15-0,6	6571
3-Way-Valve	ZTR 15-0,4	9670
3-Way-Valve	ZTR 15-0,6	6573
Electrical Duct Heater	CB 160-1,2 230V/1	5291
Electrical Duct Heater	CB 160-2,1 230V/1	5292
Electrical Duct Heater	CB 160-2,7 230V/1	5382
CB heater connection kit	1-Phase kit	142852
Duct Cooler	CWK 160-3-2,5	30022
Filters		
PF VSC 300 STD kit	F7/ePM1 60% Supply M5/ePM10 50% Extract	251909
PF VSC 300 OPT kit	F8/ePM1 70% Supply M5/ePM10 50% Extract	251910
Other		
Combi grille 160, White	CVVX 160, white	25396
Combi grille 160, Black	CVVX 160, black	25394
Fast clamp 160	FK 160	1610
Connection duct D160/1,0 M/F	SCD Flexible Silencer	2558
Silencer	LDC 160-600	5192
Silencer	LDC 160-900	5193
Control damper	TUNE-R-160-3-M1	311939
Control damper (Spring)	TUNE-R-160-3-M4	311969
Relay mounting kit	RMK Kit Systemair	576801
Control damper	TUNE-R-160-3-M2	311949
Control damper (Spring)	TUNE-R-160-3-M5	311979
Transformer 24V	PSS20 24V	202692
Iris Damper	SPI-160 C	6753
Pressure guard with pitot tube	DPR200T	212987

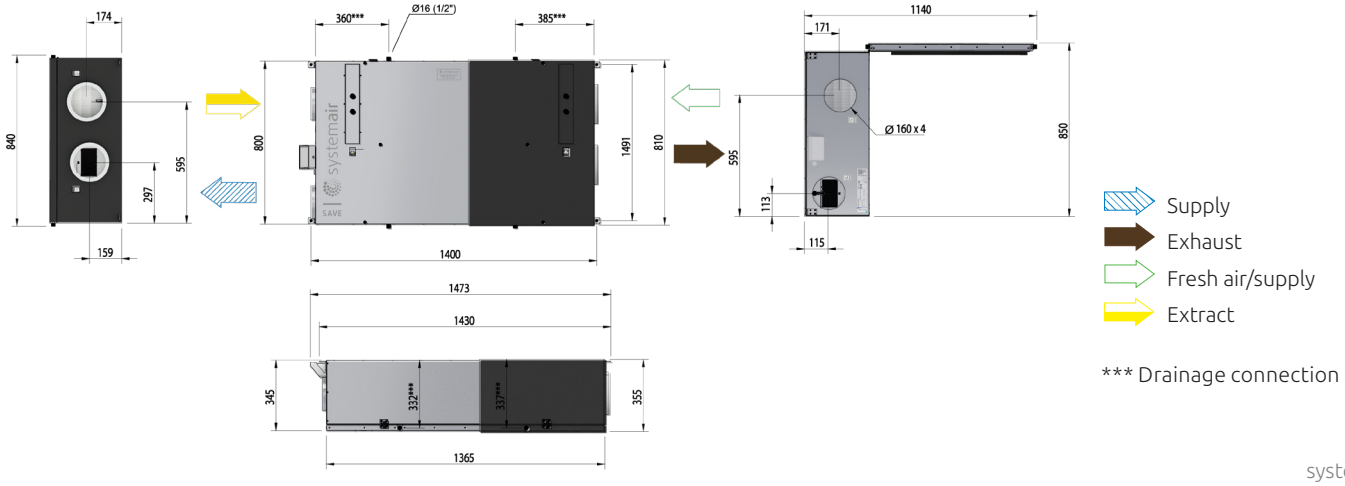

*** Drainage connection

SAVE VTC 200-1

Condensation and enthalpy model



SAVE VTC 200-1 (condensation) or SAVE VTC-E 200-1 (enthalpy) is a top connected counter flow unit designed for installation on the wall in laundry rooms, storerooms etc. in a home with a ventilated area of up to approx. 180 m2.

VTC 200-1 or VTC-E 200-1 unit is white painted, fully insulated and comes with complete control functionality. The unit automatically regulates the recovery of heating/ cooling by the built in damper and has automatic defrosting function.

SAVE CONNECT internet access module is delivered as standard with all units for remote control via mobile APP.

SAVE PRO web application for own or client device remote monitoring, control and troubleshooting.

Download SAVE CONNECT app via Google Play or Apple store.

- High efficiency condensation and enthalpy heat exchanger with high performance EC fans
- Demand ventilation control is standard with the built in humidity sensor
- Automatic defrosting
- Preheater needed for outdoor temperature < -3°C/-10°C (E)
- Selection of different control panels available:
  - SAVE TOUCH for full functionality
  - SAVE LIGHT for basic functionality
- Connection board for easy access
- Modbus communication RS-485 as standard

Mid-frequency band, Hz									
LwA dB(A)	**Tot**	63	125	250	500	1k	2k	4k	8k
Supply air	**70**	79	79	73	67	64	58	49	39
Extract air	**60**	71	59	66	54	51	39	26	25
Surrounding	**47**	46	50	54	39	33	30	27	26

The sound data table indicates the sound power level LwA, which should not be confused with the sound pressure level LpA (based on the operation point - 56 l/s at 50 Pa).

Technical data SAVE VTC 200-1 and VTC-E 200-1		
Art. no. (condensation)	Right/Left	488861/488862
Art no. (enthalpy)	Right/Left	488903/488904
Energy efficiency class		
Standard unit		A
Standard unit with accessories*		A
Voltage/Frequency	V/50 Hz	230
Power rating per fan	W	34
at example duty point:		56 l/s at 50 Pa
		200 m³/h at 50 Pa
SFP	kW/m³/s	1.22
Efficiency according EN 13141-7		84% 83% (E)**
Fuse	A	10
Input power, fan motor	W	2 x 81
Filter, supply air		
Pleat filter (PF)		ePM1 60%
Filter, extract air		
Pleat filter (PF)		ePM10 50%
Weight	kg	47 48 (E)**

* With Indoor Air Quality accessories
** (E) - Enthalpy version

SFP = Specific Fan Power (kW/m³/s)
The SFP value stated applies to the complete unit.

Performance data (Right unit)

Supply air

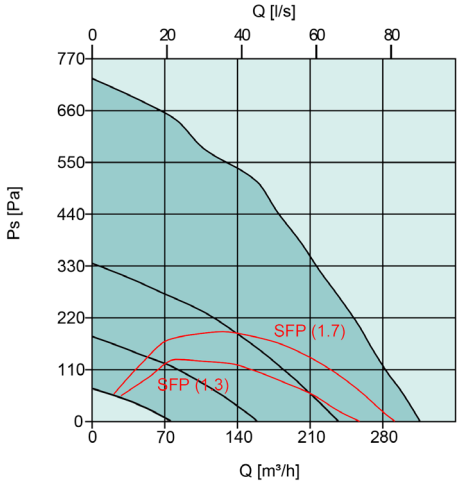

Extract air

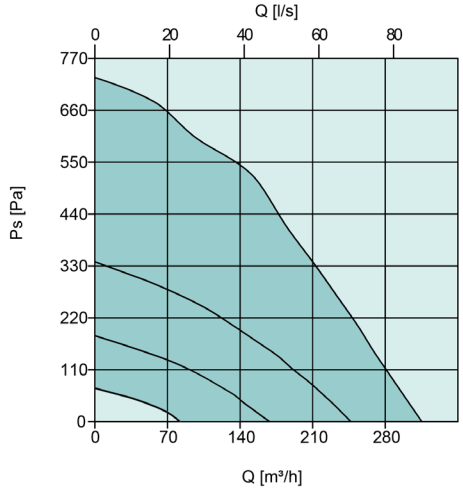

Scheme

Right-hand version

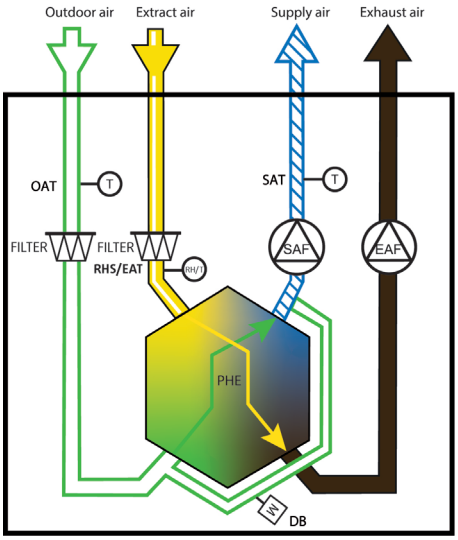

SAF	Supply fan
EAF	Extract fan
FILTER	Extract/Supply filter
OAT	Outdoor air temp. sensor
SAT	Supply air temp. sensor
RHS/EAT	Relative humidity sensor/Extract air temp. sensor
DB	Bypass damper drive
PHE	Plate Heat Exchanger

Dimensions

SAVE VTC 200-1 Right-hand version

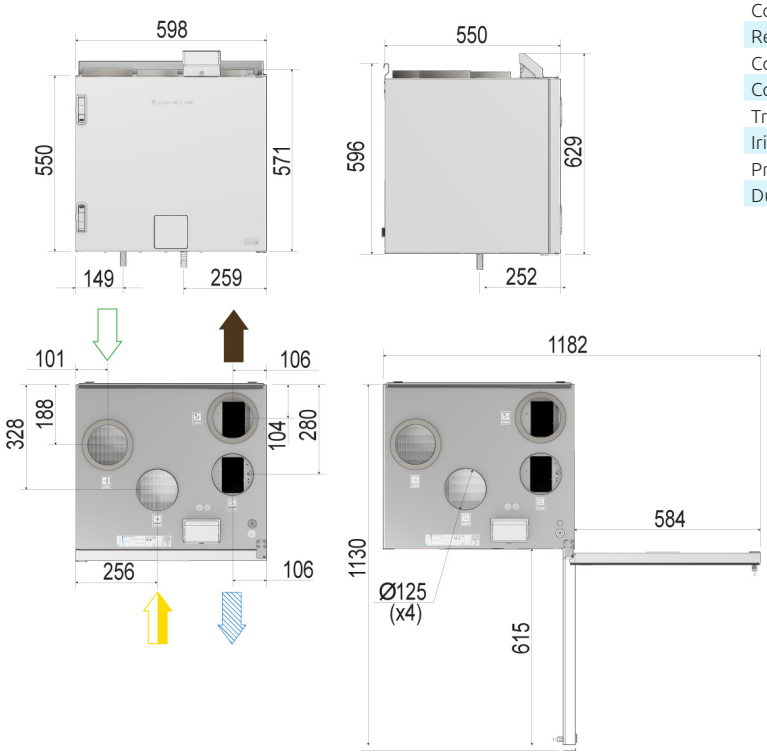



*** Drainage connection

Accessories

Accessories SAVE VTC 200-1 and SAVE VTC-E 200-1		Art. no.
Controls		
SAVE TOUCH White	Touch display white	138077
SAVE TOUCH Black	Touch display black	138078
SAVE LIGHT White	SAVE Light White	319118
SAVE LIGHT Black	SAVE Light Black	319119
SAVE Wall Mounted Kit	Control panel frame	140736
CEC Cable 12m	VK-12	24782
CEC Cable 6m	VK-6	24783
Diverting Plug	Diverting Plug	37367
Indoor Air Quality Wired		
Systemair-E CO2 sensor	T8100-E-SA-1000RTD	14904
Systemair-E CO2 + RH + Temperature	T8100-E-H-SA-10R	211522
Systemair-1 CO2 duct sensor	T8041	14906
Duct sensor NTC10K (-30-70C) 1,5 m	TG-K3/NTC10-01	211524
Room sensor NTC10K (0-50C)	TG-R5/NTC10-01	211525
Presence detector	-	6995
VAV/CAV conversion kit	-	140777
Heating/Cooling		
Duct Water heating battery 2 Rows	VBC 125-2	5457
Duct Water heating battery 3 Rows	VBC 125-3	9839
Surface sensor NTC10K (-30-150C) 1,5 m	TG-A1/NTC10-01	211523
Actuator 0-10V	RVAZ4 24A	9862
2-Way-Valve	ZTV 15-0,4	9829
2-Way-Valve	ZTV 15-0,6	6571
3-Way-Valve	ZTR 15-0,4	9670
3-Way-Valve	ZTR 15-0,6	6573
Electrical duct heater	CB 125-0.6 230V/1	5289
Electrical duct heater	CB 125-1.2 230V/1	5290
Electrical duct heater	CB 125-1.8 230V/1	5377
CB heater connection kit	1-Phase kit	142852
Duct cooler	CWK 125-3-2.5	30021
Filters		
PF VTC 200-1 STD kit	F7/ePM1 60% Supply M5/ePM10 50% Extract	398081
PF VTC 200-1 OPT kit	F8/ePM1 70% Supply M5/ePM10 50% Extract	398082
Other		
Combi grille 125, White	CVVX 125, white	26422
Combi grille 125, Black	CVVX 125, black	26421
Fast clamp 125	FK 125	1608
Connection duct D 125/1,0 M/F	SCD Flexible Silencer	2556
Silencer	LDC 125-600	5190
Silencer	LDC 125-900	5191
Control damper	TUNE-R-125-3-M1	311938
Control damper (Spring)	TUNE-R-125-3-M4	311968
Relay mounting kit	RMK kit Systemair	576801
Control damper	TUNE-R-125-3-M2	311948
Control damper (Spring)	TUNE-R-125-3-M5	311978
Transformer 24V	PSS48 24V	204385
Iris Damper	SPI-125 C	6751
Pressure guard with pitot tube	DPR200T	212987
Duct cover	Duct cover VTC 200	113227

SAVE VSR 400

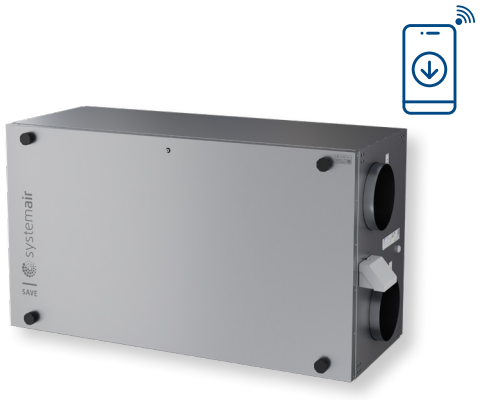

SAVE VSR 400 is a side connected unit with high efficiency stepless rotary heat exchanger. Designed for installation in the loft or in the ceiling in premises with a ventilated area of up to approx. 350 m².

VSR 400 is galvanized, double skinned, fully insulated and comes with complete control functionality. The unit accurately controls the speed of the heat exchanger after the need of heat/cooling recovery using the step less rotor motor.

SAVE CONNECT internet access module is delivered as standard with all units for remote control via mobile APP.

SAVE PRO web application for own or client device remote monitoring, control and troubleshooting.

Download SAVE CONNECT app via Google Play or Apple store.

- High efficiency rotating heat exchanger with variable speed drive and high performance EC fans
- Inspection hatch on both sides
- Demand ventilation control is standard with the built in humidity sensor
- Built in electrical re-heater
- Selection of different control panels available:
  - SAVE TOUCH for full functionality
  - SAVE LIGHT for basic functionality
- Connection board for easy access
- Modbus communication RS-485 as standard

Mid-frequency band, Hz									
LwA dB(A)	**Tot**	63	125	250	500	1k	2k	4k	8k
Supply air	**68**	83	69	69	68	58	59	56	48
Extract air	**62**	71	63	67	61	47	44	36	27
Surrounding	**45**	58	48	50	42	33	28	26	24

The sound data table indicates the sound power level LwA, which should not be confused with the sound pressure level LpA (based on the operation point - 119 l/s at 50 Pa).

Technical data SAVE VSR 400		
Art. no.		488881
Energy efficiency class		
Standard unit		A
Standard unit with accessories*		A
Voltage/Frequency	V/50 Hz	230
Power rating per fan	W	72
at example duty point:		119 l/s at 50 Pa
		430 m³/h at 50 Pa
SFP	kW/m³/s	1,21
Efficiency according EN 13141-7		83%
Fuse	A	13
Electrical re-heater power	W	1670
Input power, fan motor	W	2 x 169
Filter, supply air		
Pleat filter (PF)		F7/ePM1 60%
Filter, extract air		
Pleat filter (PF)		M5/ePM10 50%
Weight	kg	80

* With Indoor Air Quality accessories

SFP = Specific Fan Power (kW/m³/s)
The SFP value stated applies to the complete unit.

Performance data

Supply air

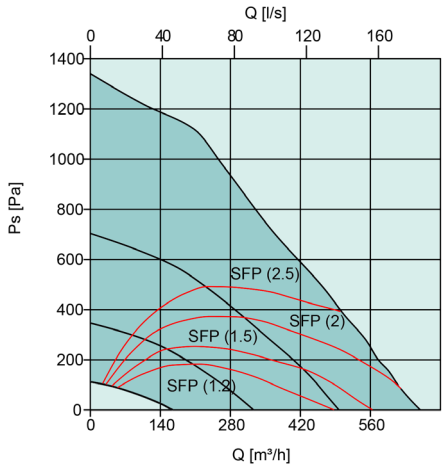

Extract air

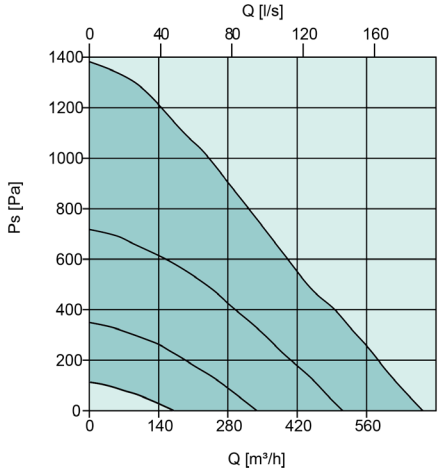

Scheme

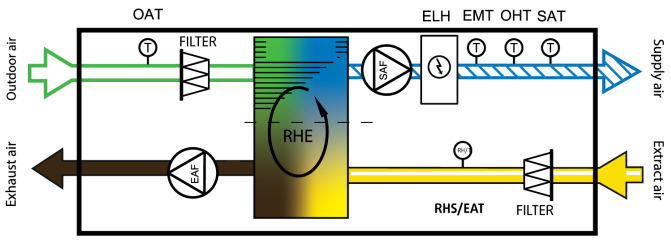

SAF	Supply fan
EAF	Extract fan
FILTER	Extract/Supply filter
OAT	Outdoor air temp. sensor
SAT	Supply air temp. sensor
RHS/EAT	Relative humidity sensor/Extract air temp. sensor
ELH	Electric heater
OHT	Overheating thermostat
EMT	Emergency thermostat
RHE	Rotating Heat Exchanger

Dimensions

SAVE VSR 400

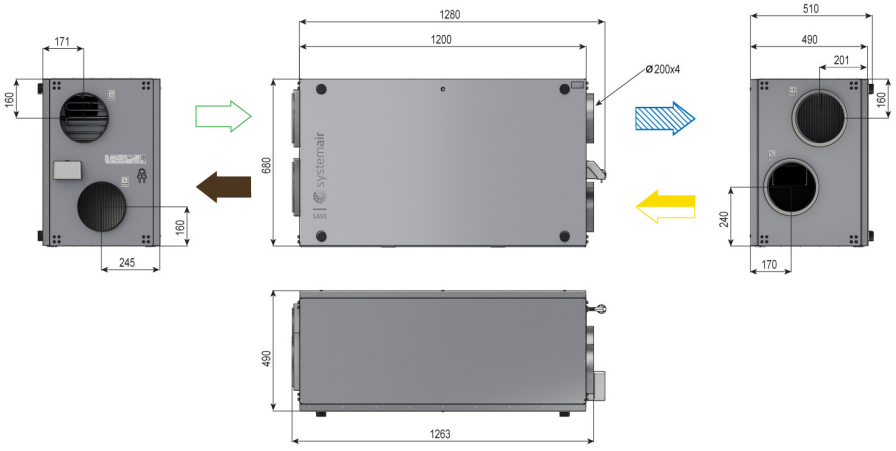

Accessories

Accessories SAVE VSR 400		Art. no.
Controls		
SAVE TOUCH White	Touch display white	138077
SAVE TOUCH Black	Touch display black	138078
SAVE LIGHT White	SAVE Light White	319118
SAVE LIGHT Black	SAVE Light Black	319119
SAVE Wall Mounted Kit	Control panel frame	140736
CEC Cable 12m	VK-12	24782
CEC Cable 6m	VK-6	24783
Diverting Plug	Diverting Plug	37367
Indoor Air Quality Wired		
Systemair-E CO2 sensor	T8100-E-SA-1000RTD	14904
Systemair-E CO2 + RH + Temperature	T8100-E-H-SA-10R	211522
Systemair-1 CO2 duct sensor	T8041	14906
Duct sensor NTC10K (-30-70C) 1,5 m	TG-K3/NTC10-01	211524
Room sensor NTC10K (0-50C)	TG-R5/NTC10-01	211525
Presence detector	-	6995
VAV/CAV conversion kit	-	140777
Heating / Cooling		
Duct Water heating battery 2 Rows	VBC 200-2	5459
Duct Water heating battery 3 Rows	VBC 200-3	9841
Surface sensor NTC10K (-30-150C) 1,5 m	TG-A1/NTC10-01	211523
Actuator 0-10V	RVAZ4 24A	9862
2-Way-Valve	ZTV 15-0,6	6571
2-Way-Valve	ZTV 15-1,0	9823
3-Way-Valve	ZTR 15-0,6	6573
3-Way-Valve	ZTR 15-1,0	9672
Electrical Duct Heater	CB 200-2,1 230V/1	5384
Filters		
PF VSR 400 STD kit	F7/ePM1 60% Supply M5/ePM10 50% Extract	398188
PF VSR 400 OPT kit	F8/ePM1 70% Supply M5/ePM10 50% Extract	398189
Other		
Combi grille 200, White	CVVX 200, white	25397
Combi grille 200, Black	CVVX 200, black	25395
Fast clamp 200	FK 200	1611
Connection duct D200/1,0 M/F	SCD Flexible Silencer	2560
Silencer	LDC 200-600	5194
Silencer	LDC 200-900	5195
Control damper	TUNE-R-200-3-M1	311940
Control damper (Spring)	TUNE-R-200-3-M4	311970
Relay mounting kit	RMK Kit Systemair	576801
Control damper	TUNE-R-200-3-M2	311950
Control damper (Spring)	TUNE-R-200-3-M5	311980
Transformer 24V	PSS20 24V	202692
Iris Damper	SPI-200 C	6754
Pressure guard with pitot tube	DPR200T	212987
Ceiling mounting kit VSR 400	-	455699
Horizontal mounting kit VSR 400	-	455799
Vertical mounting kit VSR 400	-	455899

Supply
Exhaust
Fresh air/supply
Extract

SAVE VSR 700



SAVE VSR 700 is a side connected unit with high efficiency stepless rotary heat exchanger. Designed for installation on the floor in premises with a ventilated area of up to approx. 500 m².

VSR 700 is galvanized, double skinned, fully insulated and comes with complete control functionality. The unit accurately controls the speed of the heat exchanger after the need of heat/cooling recovery using the step less rotor motor.

SAVE CONNECT internet access module is delivered as standard with all units for remote control via mobile APP.

SAVE PRO web application for own or client device remote monitoring, control and troubleshooting.

Download SAVE CONNECT app via Google Play or Apple store.

- High efficiency rotating heat exchanger with variable speed drive and high performance EC fans
- Inspection hatch on both sides
- Demand ventilation control is standard with the built in humidity sensor
- Built in electrical re-heater
- Selection of different control panels available:
  - SAVE TOUCH for full functionality
  - SAVE LIGHT for basic functionality
- Connection board for easy access
- Modbus communication RS-485 as standard

Mid-frequency band, Hz									
LwA dB(A)	**Tot**	63	125	250	500	1k	2k	4k	8k
Supply air	**63**	74	66	66	60	55	54	47	37
Extract air	**58**	65	61	67	51	43	36	26	24
Surrounding	**44**	55	49	52	38	31	26	21	22

The sound data table indicates the sound power level LwA, which should not be confused with the sound pressure level LpA (based on the operation point - 169 l/s at 50 Pa).

Technical data SAVE VSR 700		
Art. no.		488866
Energy efficiency class		
Standard unit		A
Standard unit with accessories*		A+
Voltage/Frequency	V/50Hz	230
Power rating per fan	W	69
at example duty point:		169 l/s at 50 Pa
		609 m3/h at 50 Pa
SFP	kW/m³/s	0,81
Efficiency according EN 13141-7		83%
Fuse	A	10
Electrical re-heater power	W	1670
Input power, fan motor	W	2 x 170
Filter, supply air		
Pleat filter (PF)		F7/ePM1 60%
Filter, extract air		
Pleat filter (PF)		M5/ePM10 50%
Weight	kg	120

* With Indoor Air Quality accessories

SFP = Specific Fan Power (kW/m³/s)
The SFP value stated applies to the complete unit.

Performance data

Supply air

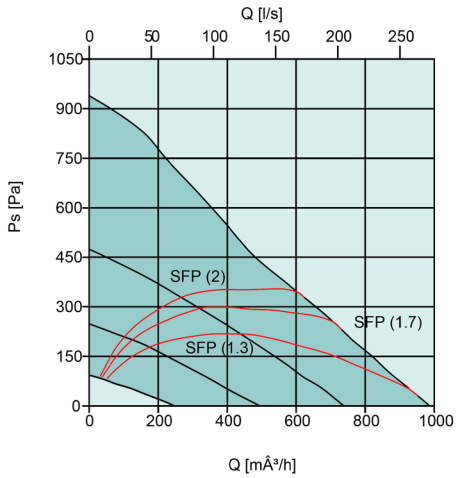

Extract air

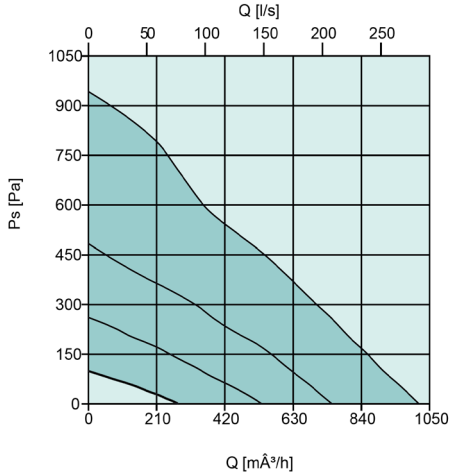

Scheme

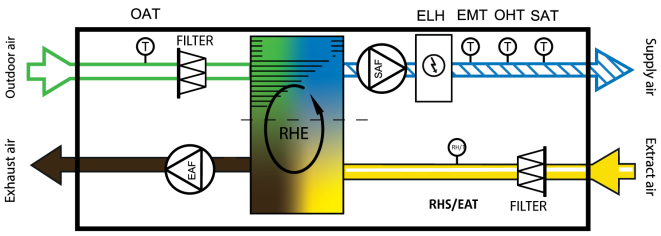

SAF	Supply fan
EAF	Extract fan
FILTER	Extract/Supply filter
OAT	Outdoor air temp. sensor
SAT	Supply air temp. sensor
RHS/EAT	Relative humidity sensor/Extract air temp. sensor
ELH	Electric heater
OHT	Overheating thermostat
EMT	Emergency thermostat
RHE	Rotating Heat Exchanger

Dimensions

SAVE VSR 700

Accessories

Accessories SAVE VSR 700		Art. no.
Controls		
SAVE TOUCH White	Touch display white	138077
SAVE TOUCH Black	Touch display black	138078
SAVE LIGHT White	SAVE Light White	319118
SAVE LIGHT Black	SAVE Light Black	319119
SAVE Wall Mounted Kit	Control panel frame	140736
CEC Cable 12m	VK-12	24782
CEC Cable 6m	VK-6	24783
Diverting Plug	Diverting Plug	37367
Indoor Air Quality Wired		
Systemair-E CO2 sensor	T8100-E-SA-1000RTD	14904
Systemair-E CO2 + RH + Temperature	T8100-E-H-SA-10R	211522
Systemair-1 CO2 duct sensor	T8041	14906
Duct sensor NTC10K (-30-70C) 1,5 m	TG-K3/NTC10-01	211524
Room sensor NTC10K (0-50C)	TG-R5/NTC10-01	211525
Presence detector	-	6995
VAV/CAV conversion kit	-	140777
CAV kit		161100
Heating / Cooling		
Water coil VSR 700	WH VSR 700	462101
Duct Water heating battery 2 Rows	VBC 250-2	5460
Duct Water heating battery 3 Rows	VBC 250-3	9843
Surface sensor NTC10K (-30-150C) 1,5 m	TG-A1/NTC10-01	211523
Actuator 0-10V	RVAZ4 24A	9862
2-Way-Valve	ZTV 15-1,6	9824
3-Way-Valve	ZTR 15-1,6	9673
Electrical Duct Heater	CB 250-3,0 230V/1	5385
CB heater connection kit	1-Phase kit	142852
Electrical Duct Heater	CB 250-6,0 400V/2	5372
Electrical Duct Heater	CB 250-9,0 400V/3	5373
CB heater connection kit	2/3-Phase kit	151612
Duct Cooler	CWK 250-3-2,5	30024
Filters		
PF VSR 700 STD kit	F7/ePM1 60% Supply M5/ePM10 50% Extract	454339
PF VSR 700 OPT kit	F8/ePM1 70% Supply M5/ePM10 50% Extract	454340
Other		
Combi grille 250, White	CVVX 250, white	146260
Combi grille 250, Black	CVVX 250, black	8498
Fast clamp 250	FK 250	1612
Connection duct D250/1,0 M/F	SCD Flexible Silencer	2561
Silencer	LDC 250-900	5196
Damper + Motor	EFD 250 + TF230	6748
Control damper	TUNE-R-250-3-M1	311941
Control damper (Spring)	TUNE-R-250-3-M4	311971
Relay mounting kit	RMK Kit Systemair	576801
Control damper	TUNE-R-250-3-M2	311951
Control damper (Spring)	TUNE-R-250-3-M5	311981
Transformer 24V	PSS20 24V	202692
Iris Damper	SPI-250 C	6755
Pressure guard with pitot tube	DPR200T	212987

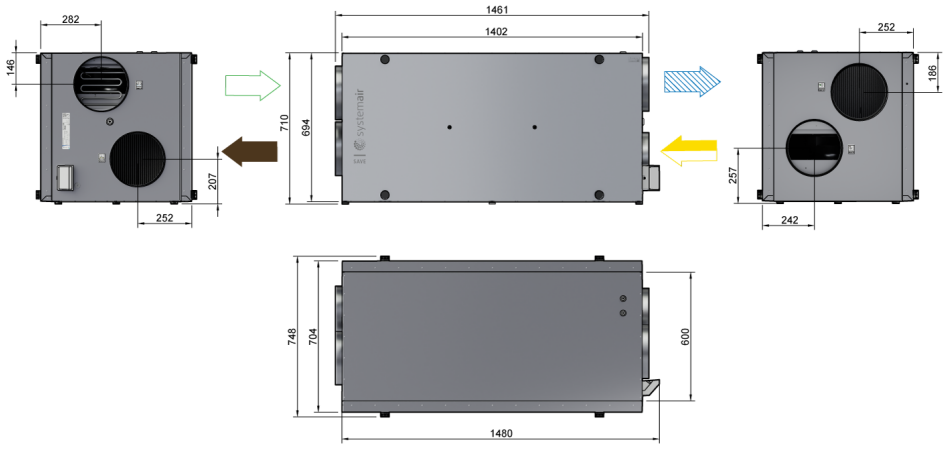

Supply
Exhaust
Fresh air/supply
Extract

SAVE Control System

Simplified connection, configuration and control

SAVE control benefits:

- Flexible and freely configurable
- External connection board
- Integrated Modbus RTU for BMS/ SCADA integration
- SAVE CONNECT 3.0 in standard delivery for remote control and commissioning on site.
- Selection of accessory User interfaces
  - SAVE TOUCH
  - SAVE LIGHT

The SAVE control system - standard platform for the SAVE model range.

SAVE devices are standardly equipped with SAVE CONNECT 3.0 Internet Access Module which enables remote control using SAVE CONNECT mobile app and WEB interface for easy device commissioning, control and troubleshooting without need for additional control panels or internet!

Internet connected SAVE devices can also be linked to SAVE PRO Cloud application. Systemair's offers convenience of remote and adaptable technical support, troubleshooting assistance, and the capability to monitor multiple devices—all seamlessly accessible through a unified interface.

We also offer options for control Interfaces – SAVE TOUCH for advanced users and SAVE LIGHT for very basic control and information.





SAVE TOUCH

Advanced touch screen controller with intuitive and simple control interface. Simple unit configuration using Start Up Wizard, provides an option to monitor and control all unit parameters and offers an overview of alarm and data history.



SAVE LIGHT

Simple control panel for basic control functionality, providing an option to reset filter timer and alarm indication.

CONTROL

Systemair Services
Remote service of SAVE units and filter purchases.

Smart Home integrations
Link your SAVE unit to third party Smart Home platforms (Amazon, Alexa and Google home).



SAVE PRO
Professional users can monitor, commission and control their own and client SAVE units remotely using free and BMS like Portal.



SAVE CONNECT Cloud
SAVE CONNECT reaches Homesolutions cloud services over your home internet gateway, that enables user not only to remotely control the unit, but also to receive unit software updates, access third party Smart Home platforms, remote technical service, filter purchase and more.

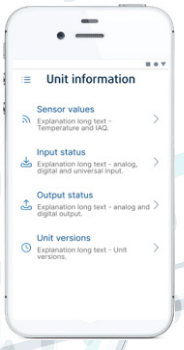

WEB Interface (Local control)
Connect to unit using your mobile device or Laptop over WLAN (WiFi) for easy commissioning or control of the SAVE unit. No Internet required

Mobile APP (Remote control)
The SAVE CONNECT mobile application offers full unit control and remote configuration functionality. The app completely eliminates the need for additional control panels, in addition offering a possibility for remote service and control of the unit.



SAVE CONNECT 3.0
Solution enabling the customer to remotely control the SAVE unit, manage unit configuration.

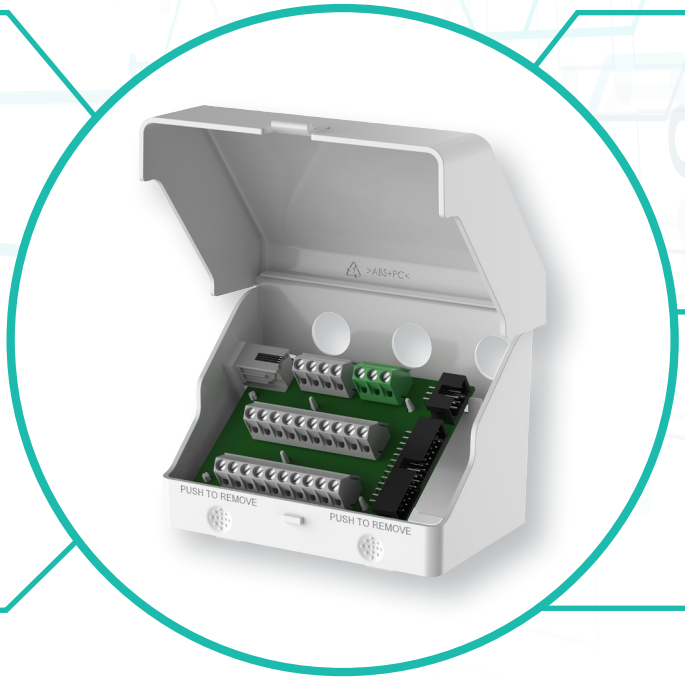

Standard Modbus RTU
Freely configurable Modbus RTU over RS485 available for BMS integration.

Connectors for external components
Connectors for external components (temperature, airflow control, safety, IAQ sensor, etc.) on the control units are clearly marked and grouped together to reduce installation and startup time. The external connection board simplifies accessory installation.

SAVE PRO

for professional ventilation management



SAVE CONNECT 3.0

Gateway to the SAVE unit for Mobile APP or Local WEB Interface

Stay updated
Receive all the latest unit software updates keeping your unit up and running with all the latest unit functions and features.

Remote Service with SAVE PRO Cloud application
Connect to SAVE PRO Cloud – professional Ventilation Management platform for B2B partners. Get the convenience of accessing remote and adaptable technical support, troubleshooting assistance, and the capability to monitor multiple own and client devices.



SAVE CONNECT 3.0 module

Wireless
SAVE CONNECT 3.0 module enables wireless internet connection from home router or your mobile phone.

Store and Save
Configuration files can be stored into the SAVE CONNECT 3.0 module, allowing users to copy the configuration from one unit to another without requiring an Internet connection.

Remote Access via APP
SAVE CONNECT 3.0 enables the user to control the device using the SAVE CONNECT mobile application, unlocking full device control, monitoring and configuration functionality!

Download SAVE CONNECT mobile app from Google Play or App Store.

GET IT ON Google Play

Download on the App Store

Local access via WEB interface
SAVE CONNECT 3.0 fully replaces SAVE TOUCH control panel for installers, enabling configuration, troubleshooting and control of the SAVE device via inbuilt WEB page. No Internet or app required – just a mobile device with a web browser!

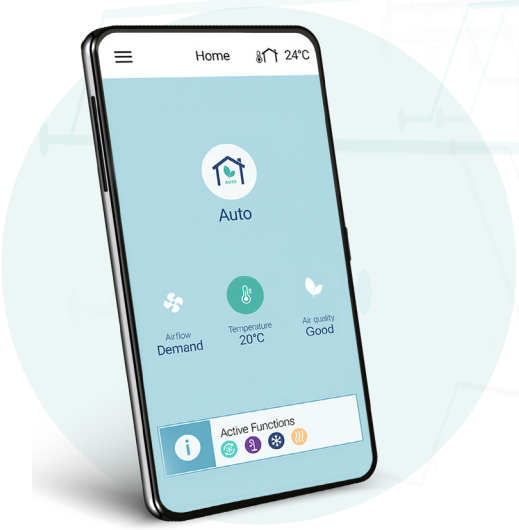

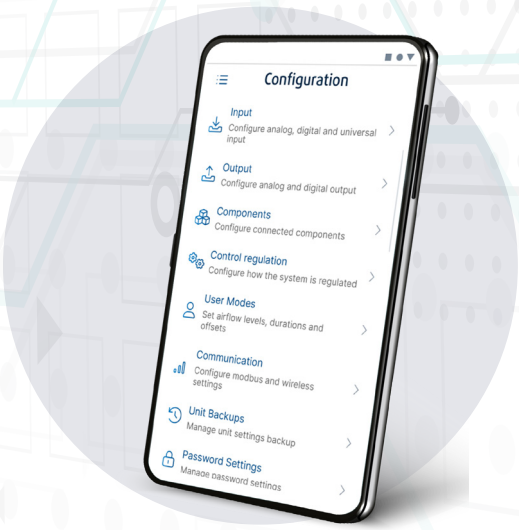

SAVE TOUCH

Advanced control panel with touch display for end-customers and installers.



Useful live data
Active functions tab provides information about current unit activity.

Make people feel good
Use pre-configured user modes to adapt the unit operation to your needs.

Follow-up
Follow-up on unit operation historical data with an alarm and unit data history log functions.

Expand
One control panel is not enough? Connect up to 10 displays!

Easy set-up
Use the Start-up wizard for quick and seamless unit configuration.

Capacitive display
TFT based touch display provides high contrast, great visibility angles and clear visibility.

Sleep mode
When the display is unused it will switch to Quick Info screensaver mode, providing only the most relative unit information.

You are in control
Control all features of your unit - change airflow and temperature setpoints, configure and adjust control functions and configure additional devices.

2 Permanent operation modes

MANUAL MODE
Gives airflow control to the user.

AUTO MODE
Automatically controls indoor air quality.

5 Temporary operation modes

AWAY MODE
Save the energy once the house is unoccupied for shorter periods of time.

CROWDED MODE
Increase the airflow levels during periods of high occupancy.

FIREPLACE MODE
Create an overpressure inside the building.

REFRESH MODE
Increase the airflow levels for shorter periods of time.

HOLIDAY MODE
Save the energy once the house is unoccupied for longer periods of time.

SAVE LIGHT

Ergonomic and robust control panel, developed for end-customers.







Sleep mode
The display will go into a full dark mode during the pre-set night hours.

Visual notifications
LEDs indicate an alarm state and if it is the time to change the filters.

Expand
One control panel is not enough? Connect up to 5 displays!

Standard
SAVE LIGHT use the same plastic housing as the SAVE TOUCH display so all the mounting places are universal.

Display
SAVE LIGHT comes in both black and white. Bright LEDs ensure clear visual status indication.

Only what you need
Control the airflow levels using the intuitive two-button interface.

2 Permanent operation modes

MANUAL MODE
Gives airflow control to the user.

AUTO MODE
Automatically controls indoor air quality.

1 Temporary operation mode

REFRESH MODE
Increase the airflow levels for shorter periods of time.


systemair